SR2

Manuale istruzioni
Instruction handbook
Anwender-Handbuch
Instructions de montage
Manuale de instrucciones
Instruções de montagem

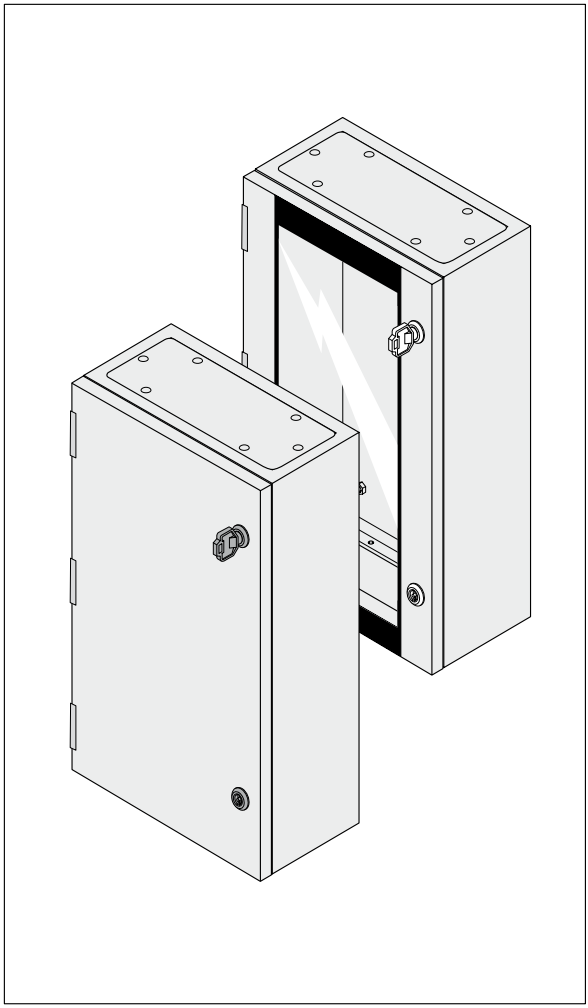

Power and productivity
for a better world™

Note

Se correttamente scelti e assemblati, come da indicazioni presenti sul catalogo e sul manuale istruzioni, consentono la realizzazione di quadri elettrici rispondenti alla Norma IEC 61439-1-2/IEC 62208 in base a quanto previsto dalla Direttiva Bassa Tensione della Comunità Europea 2006/95/CE di Bassa Tensione (che sostituisce la 73/23/CEE e successivi emendamenti).
ABB si riserva il diritto di effettuare qualsiasi cambiamento necessario, in qualsiasi momento e senza alcun preavviso.
Non può essere accettata alcuna responsabilità per eventuali imprecisioni od omissioni contenute in questa pubblicazione, nonostante sia stata prestata la massima cura per renderla più completa ed accurata possibile.
È proibita la riproduzione, la memorizzazione e la trasmissione anche parziale di questa pubblicazione.

Notes

If they are correctly chosen and assembled - as per the catalogue and handbook instructions - the parts allow you to make up electrical switchboards conforming to IEC 61439-1-2/IEC 62208, in accordance to the EEC directive for low tension 2006/95/CE (previous directive 73/23/EEC).
ABB reserves the right make any modifications without prior advice.
We are not liable for possible omissions or imprecision of this issue, despite all efforts to make it the most complete and accurate as possible.
Reproductions, storage and transmission (even if only partial) of this release is prohibited.

Anmerkungen

Wenn die Schaltschränke unter Beachtung der Angaben im Katalog und im Anwender-Handbuch richtig ausgewählt und zusammengebaut werden, ist ihre Realisierung nach Norm IEC 61439-1-2/IEC 62208 möglich, entsprechend der Unterspannungs-Richtlinie EG 2006/95/CE (vorhergehend Richtlinie 73/23/CEE). ABB behält sich das Recht vor jederzeit und ohne vorherige Mitteilung alle erforderlichen Änderungen vorzunehmen.
Es kann keinerlei Verantwortung für eventuelle Ungenauigkeiten oder Unterlassungen in dieser Veröffentlichung übernommen werden, wenngleich große Sorgfalt darauf verwendet wurde, sie so vollsändig und sorgfältig wie möglich zu gestalten.
Die Reproduktion, die Speicherung und die auch nur teilweise Weiterleitung dieser Veröffentlichung ist verboten.

Informations

Le respect des régles de montage permet la réalisation de tableaux électriques conformes à la norme IEC 61439-1-2/IEC 62208 et à la Directive Européenne basse tension 2006/95/CE (précédent Directive 73/23/CEE).
ABB se réserve le droit d'effectuer toute variation nécessaire, sans préavis, et décline toute responsabilité pour les éventuelles imprécision ou omission contenues dans le catalogue, même si tous les soins ont été apportés afin de le rendre complet et exhaustif.
Il est interdit de reproduire, mémoriser ou transmettre même partiellement ce catalogue.

Notas

Si se seleccionan y montan correctamente siguiendo las indicaciones presentes en el catálogo y en el manual de instrucciones, permiten realizar cuadros eléctricos conformes con la Norma IEC 61439-1-2/IEC 62208 según lo previsto por la Norma sobre la Baja tensión de la Comunidad Europea 2006/95/CE (anterior Norma 73/23/CEE).
ABB se reserva el derecho de efectuar las modificaciones necesarias en cualquier momento y sin aviso previo.
La empresa no se asume ninguna responsabilidad por eventuales imprecisiones u omisiones presentes en esta publicación ya que la misma ha sido redactada con suma atención para presentar instrucciones lo más posible completas y cuidadas.
Está prohibido reproducir, almacenar y transmitir, aunque sea parcialmente, esta publicación.

Observações

Respeitando as regras de escolha e istrucções de montagem de todos os componentes presentes nos catálogos e no manual de istrucções, permite a realização de quadros eléctricos em comformidade com a Norma IEC 61439-1-2/IEC 62208, de acordo com o previsto na Directiva de Baixa Tensão da Comunidade Europeia 2006/95/CE (precedente Directiva 73/23/CEE).
A ABB reserva-se o direito de fazer alterações necessárias, em qualquer momento, sem aviso prévio.
A ABB não assume qualquer responsabilidade por eventuais imprecisões ou omissões contidas nesta publicação, apesar desta ter sido elaborada com a maior cuitado, para a tornar o mais completa e exacta possível.
É proibida a reprodução, memorização e transissão, mesmo que parcial, desta publicação, sem autorização prévia da ABB.

Sommario
Summary
Übersicht
Sommaire
Índice
Índice

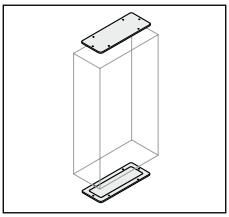

SRN3215K-SRN3315K-SRN3415K-SRN4315K-SRN4320K-SRN4420K-SRN4620K-SRN5320K SRN5420K-SRN5425K-SRN6420K-SRN6425K-SRN6625K-SRN7520K-SRN7525K-SRN8625K SRN8630K-SRN8830K-SRN10625K-SRN10630K-SRN10830K-SRN12630K-SRN12830K SRN5420VK-SRN5425VK-SRN6420VK-SRN6425VK-SRN7520VK-SRN7525VK-SRN8625VK SRN8630VK-SRN10625VK-SRN10630VK-SRN10830VK-SRN12630VK-SRN12830VK-SR4620EMCK SR6625EMCK-SR10830EMCK 6

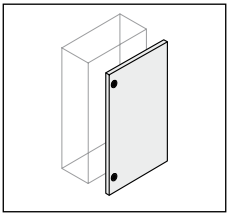

AA8001-AA8002-AA8003-AA5190-AA5200-EV1008-EV1036-EV1037-EV1039 7

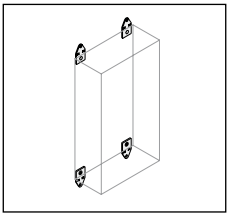

AA1206 8

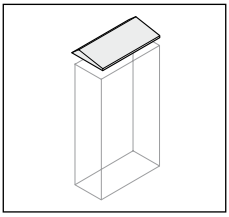

TT2015K-TT3015K-TT4015K-TT3020K -TT4020K-TT5020K-TT6020K-TT4025K-TT5025K-TT6025K-TT6030K-TT8030K 9

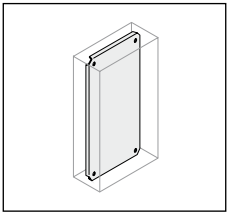

PF3020-PF3030-PF3040-PF4030-PF4040-PF4060-PF5030-PF5040-PF6040-PF6060-PF7050-PF8060-PF8080-PF1060-PF1080-PF1260-PF1280-TQ3020-TQ3030-TQ3040-TQ4030-TQ4040-TQ4060-TQ5030-TQ5040-TQ6040-TQ6060-TQ7050-TQ8060-TQ8080-TQ1060-TQ1080-TQ1260-TQ1280-AA8025-AA8050 10

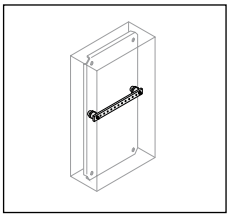

AA8010-AA8011 11

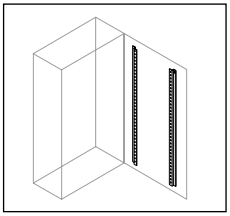

TS6009-TS7009-TS8009 12

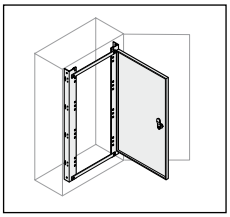

KC5040K-KC6040K-KC7050K-KC8060K-KC1060K-KC1080K-KC1260K-KC1280K 13

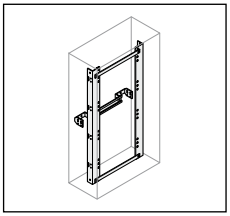

KD5040K-KD6040K-KD8060K-KD1060K-KD1080K-KD1260K-KD1280K-GD4006-GD6006-GD8006-AP6001 14

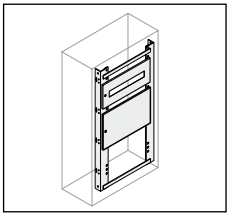

PM1414K-PM1625K-PM1836K-PS2476K-PS2676K-PS2876K-PC1406K-PC1606K-PC1806K-PC2606K-PC2806K 15

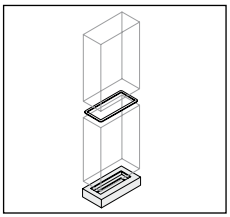

GZ4020-GZ4025-GZ6025-GZ6030-GZ8030-ZA4020-ZA4025-ZA6025-ZA6030-ZA8030 16

SRN3215K-SRN3315K-SRN3415K
SRN4315K-SRN4320K-SRN4420K
SRN4620K-SRN5320K-SRN5420K
SRN5425K-SRN6420K-SRN6425K
SRN6625K-SRN7520K-SRN7525K
SRN8625K-SRN8630K-SRN8830K
SRN10625K-SRN10630K-SRN10830K
SRN12630K-SRN12830K-SRN5420VK
SRN5425VK-SRN6420VK-SRN6425VK
SRN7520VK-SRN7525VK-SRN8625VK
SRN8630VK-SRN10625VK-SRN10630VK
SRN10830VK-SRN12630VK
SRN12830VK-SR4620EMCK
SR6625EMCK-SR10830EMCK

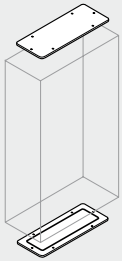

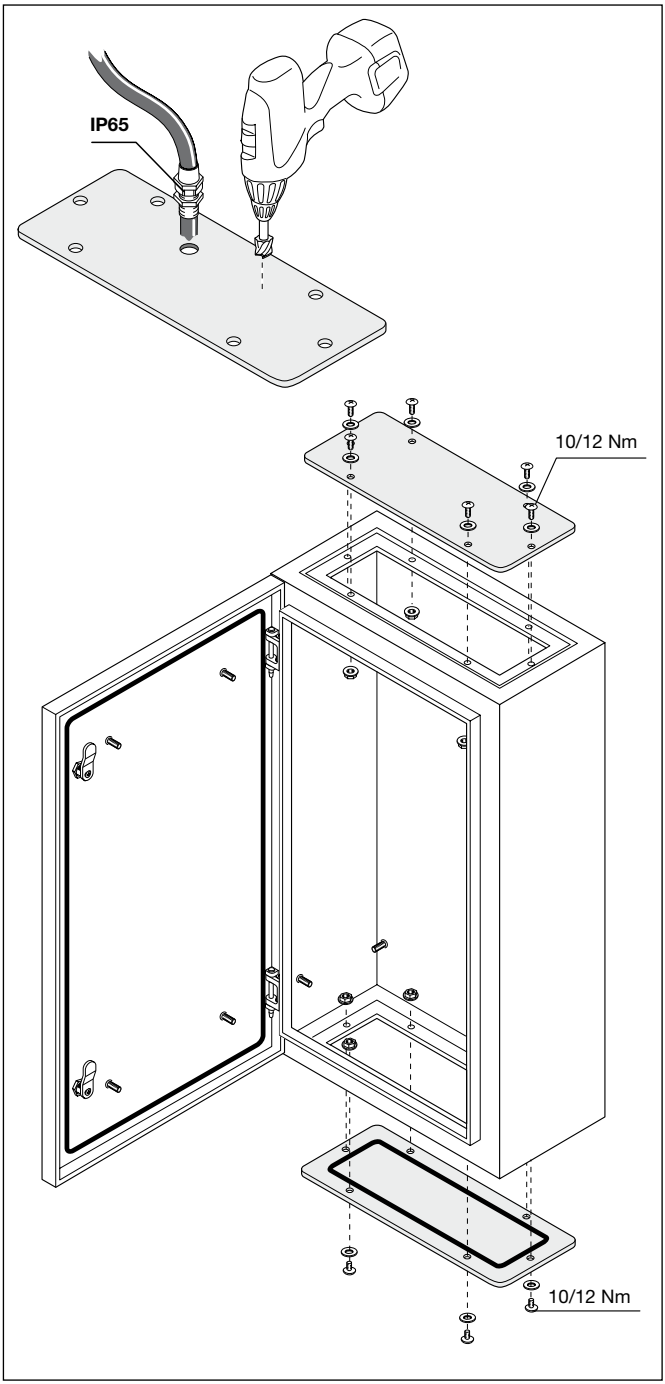

AA8001-AA8002-AA8003-AA5200
AA5190-AA5200-EV1008-EV1036
EV1008-EV1037-EV1008-EV1039

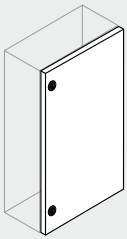

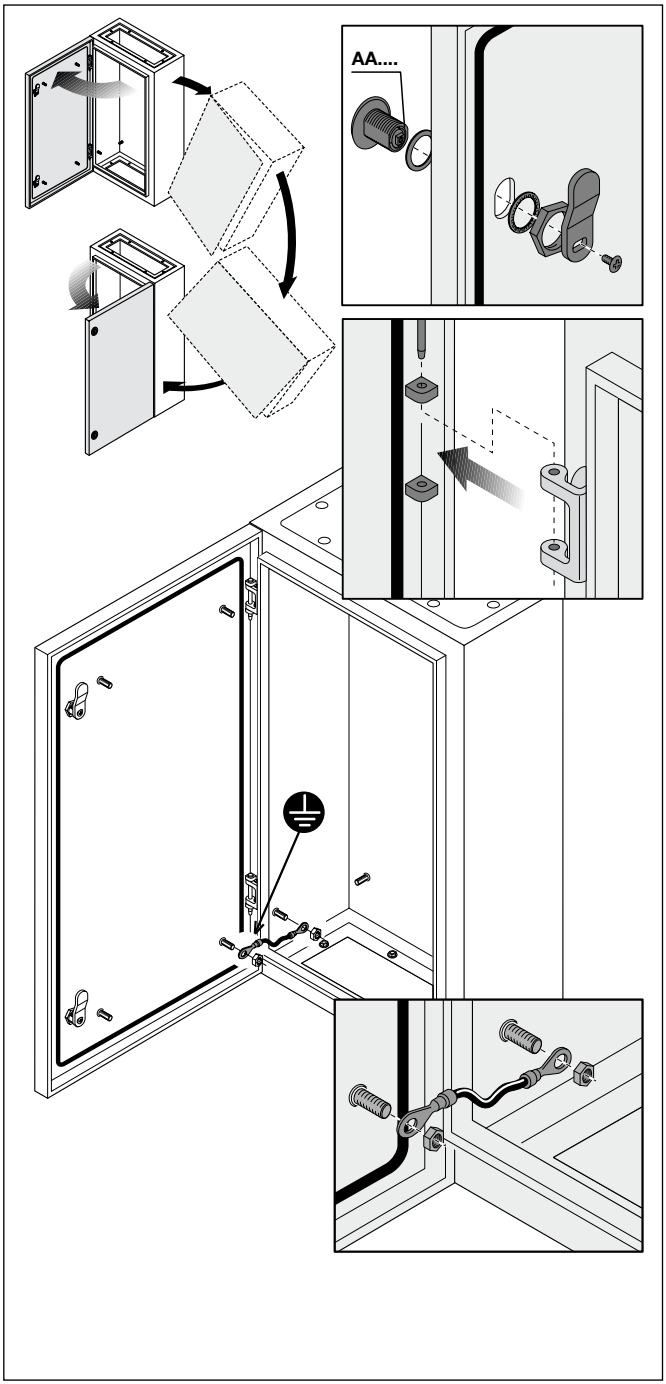

AA1206

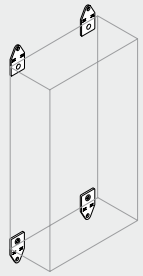

4xM6



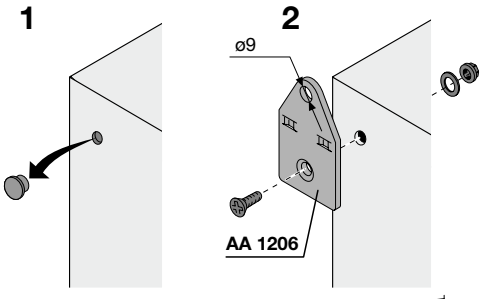

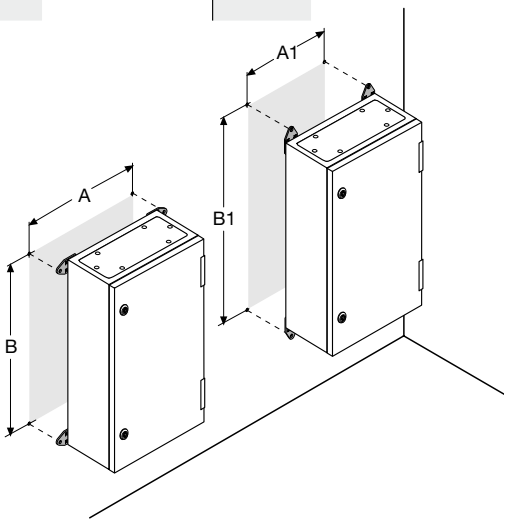

			A	B	A1	B1
SRN3215K			237	263	163	337
SRN3315K			337	263	263	337
SRN3415K			437	263	363	337
SRN4315K			337	363	263	437
SRN4320K			337	363	263	437
SRN4420K			437	363	363	437
SRN4620K		**SR4620EMCK**	637	363	563	437
SRN5320K			337	463	263	537
SRN5420K	**SRN5420VK**		437	463	363	537
SRN5425K	**SRN5425VK**		437	463	363	537
SRN6420K	**SRN6420VK**		437	563	363	637
SRN6425K	**SRN6425VK**		437	563	363	637
SRN6625K		**SR6625EMCK**	637	563	563	637
SRN7520K	**SRN7520VK**		537	663	463	737
SRN7525K	**SRN7525VK**		537	663	463	737
SRN8625K	**SRN8625VK**		637	763	563	837
SRN8630K	**SRN8630VK**		637	763	563	837
SRN8830K			837	763	763	837
SRN10625K	**SRN10625VK**		637	963	563	1037
SRN10630K	**SRN10630VK**		637	963	563	1037
SRN10830K	**SRN10830VK**	**SR10830EMCK**	837	963	763	1037
SRN12630K	**SRN12630VK**		637	1163	563	1237
SRN12830K	**SRN12830VK**		837	1163	763	1237

TT2015K-TT3015K-TT4015K-TT3020K
TT4020K-TT5020K-TT6020K-TT4025K
TT5025K-TT6025K-TT6030K-TT8030K

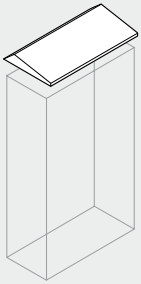

4xM6

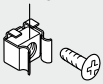

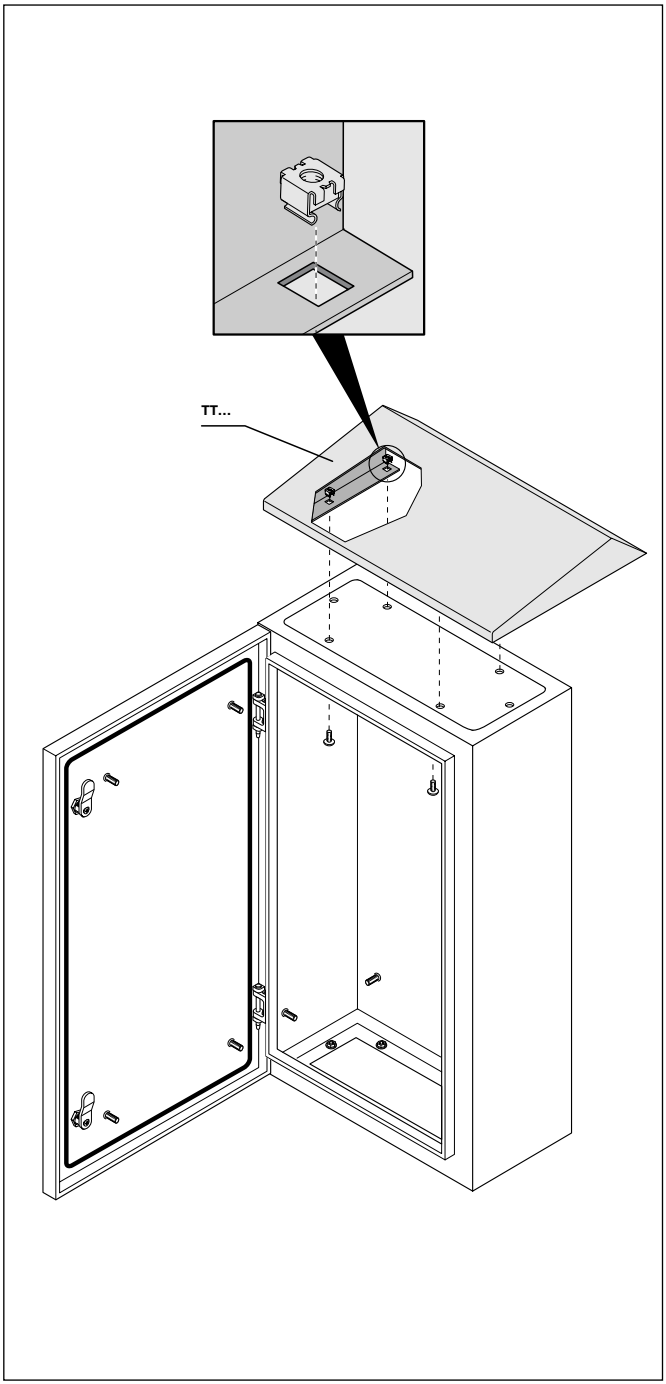

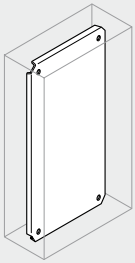

PF3020-PF3030-PF3040-PF4030-PF4040
PF4060-PF5030-PF5040-PF6040-PF6060
PF7050-PF8060-PF8080-TQ3020-TQ3030
TQ3040-TQ4030-TQ4040-TQ4060-TQ5030
TQ5040-TQ6040-TQ6060-TQ7050-TQ8060
TQ8080

4xM6



PF1060-PF1080-PF1260-PF1280
TQ1060-TQ1080-TQ1260-TQ1280

8xM6



AA8025-AA8050

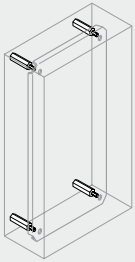

12x



12x

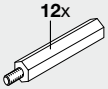

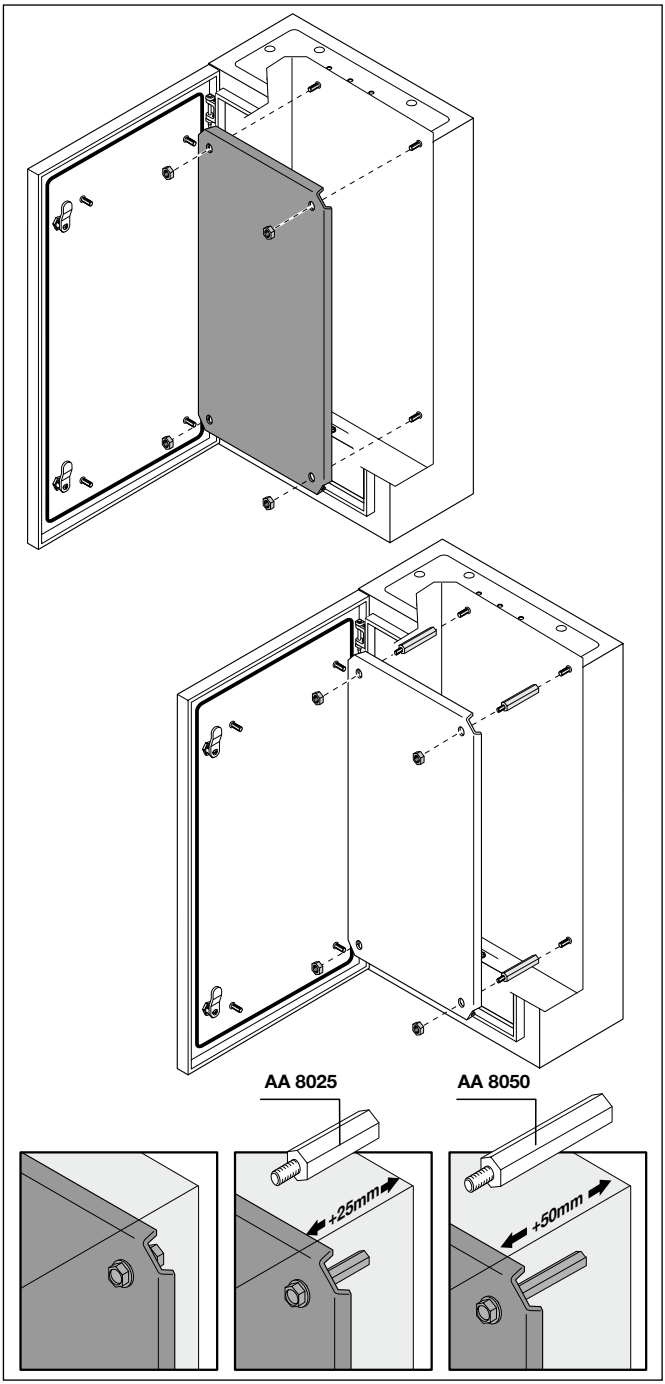

AA8010-AA8011

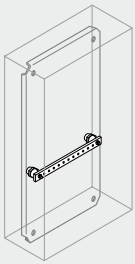

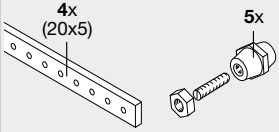

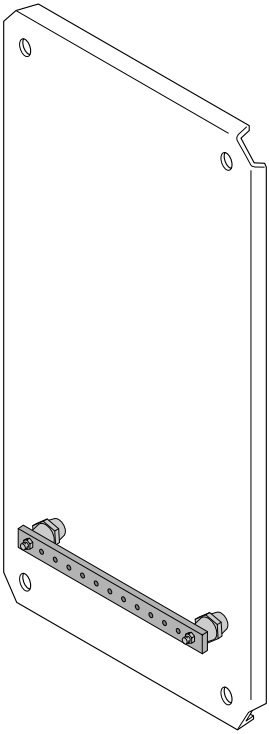

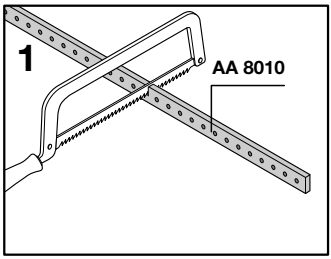

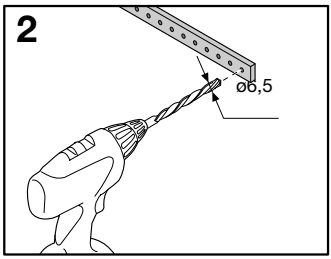

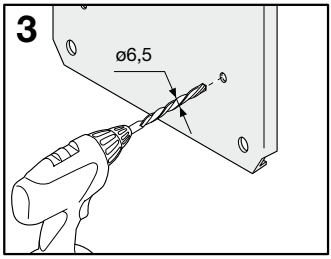

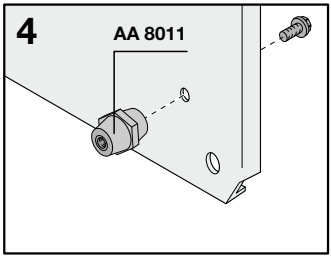

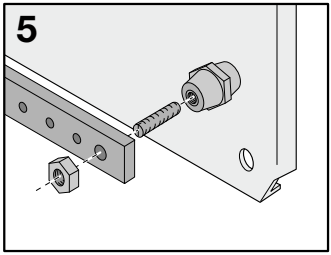

TS6009-TS7009-TS8009

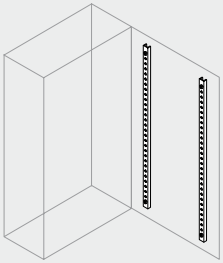

4xM6



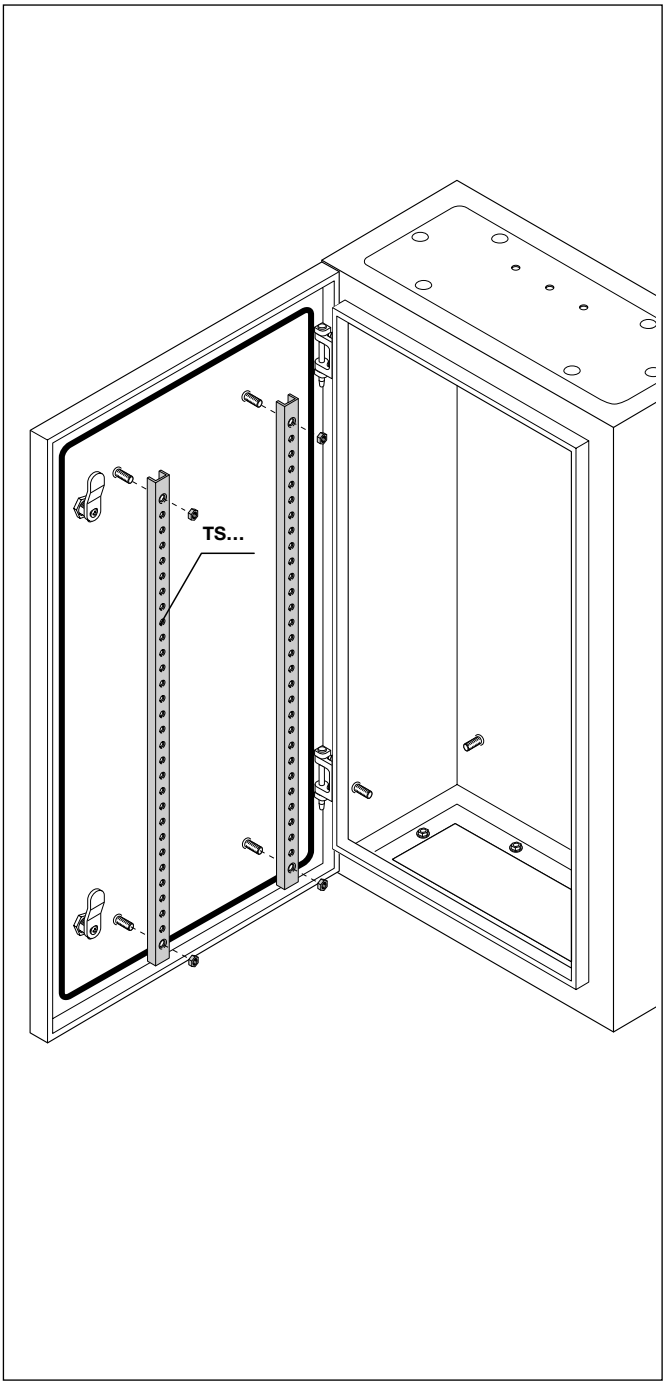

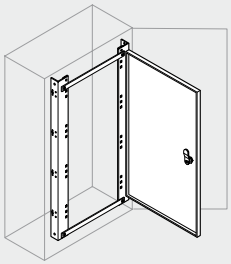

KC5040K-KC6040K-KC7050K-KC8060K

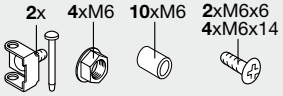

KC1060K-KC1080K-KC1260K-KC1280K

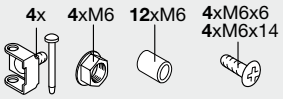

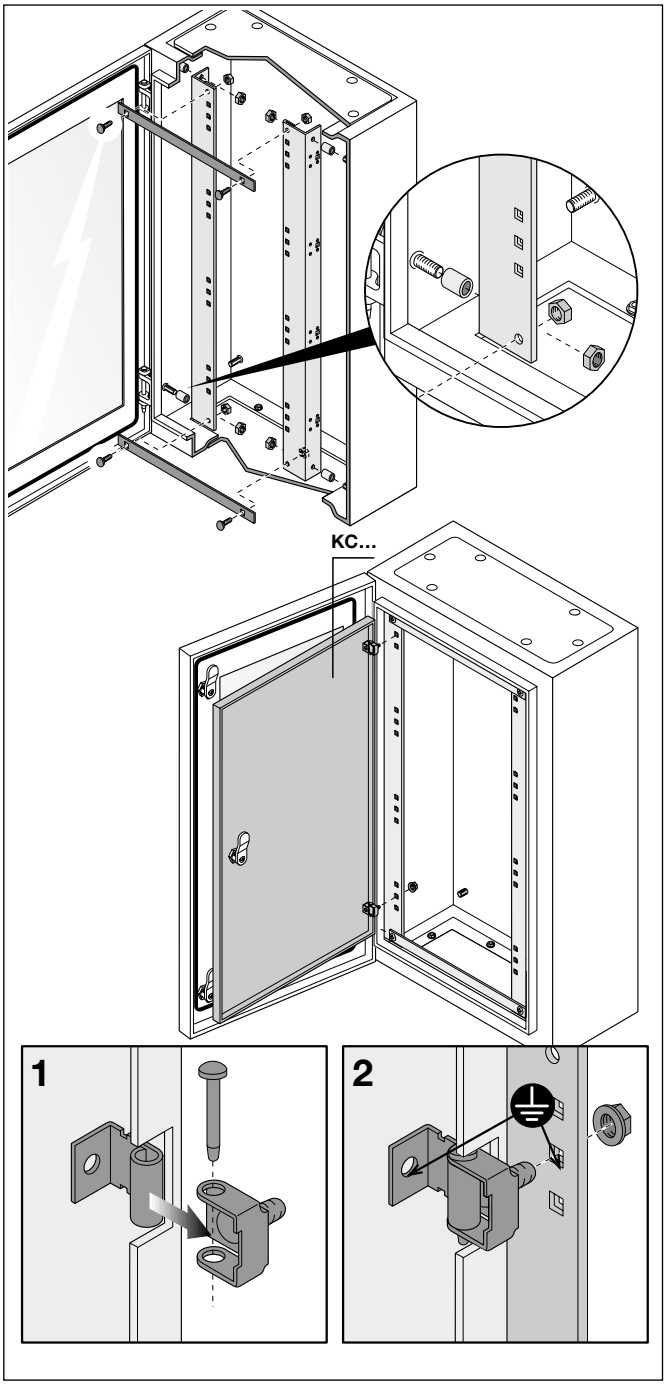

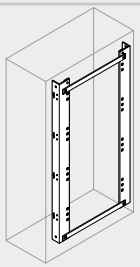

KD5040K-KD6040K-KD8060K

4xM6 **8**xM6 **4**xM6x10 **4**xM6x14



KD1060K-KD1080K-KD1260K-KD1280K

8xM6 **12**xM6 **6**xM6x10 **4**xM6x14



GD4006-GD6006-GD8006-AP6001

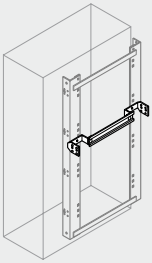

4xM6 **2**xM6x10 **2**xM6x25



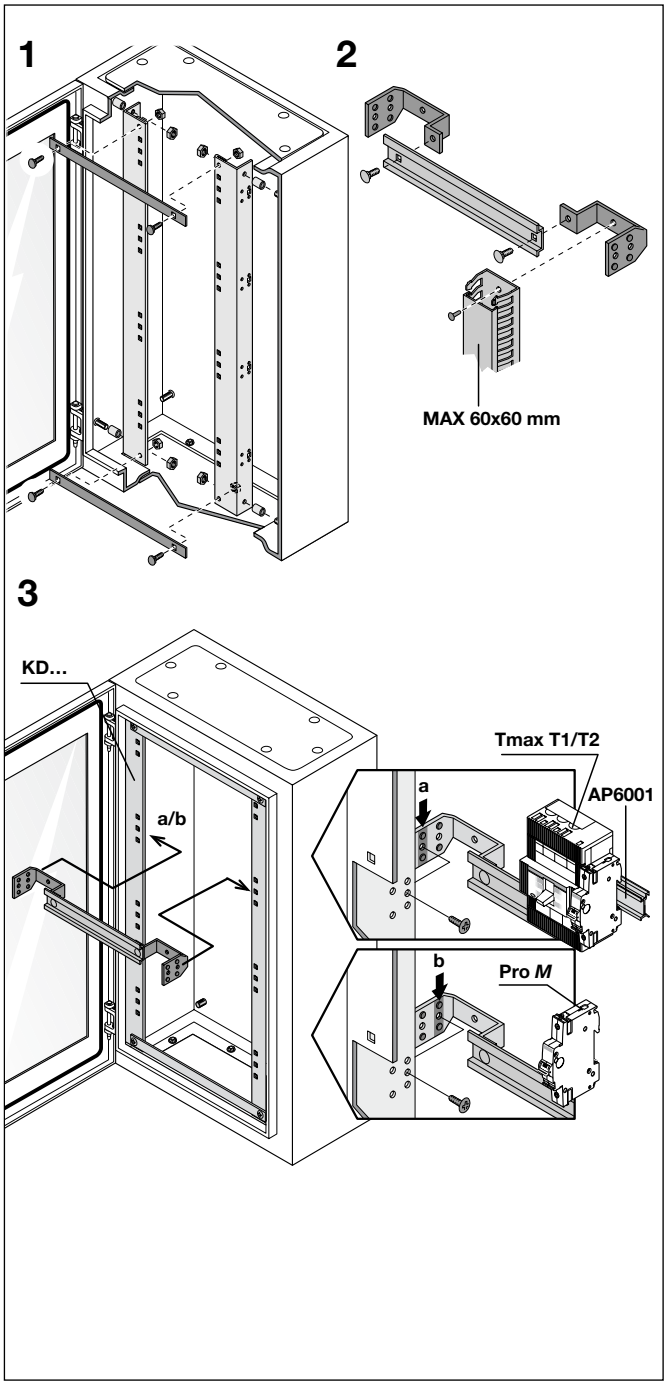

PM1414K-PM1625K-PM1836K-PS2476K PS2676K-PS2876K-PC1406K-PC1606K PC1806K

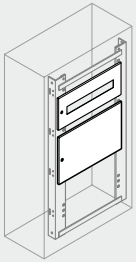

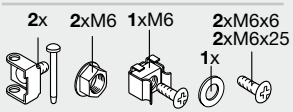

PC2606K-PC2806K

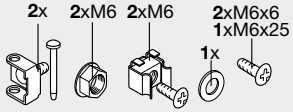

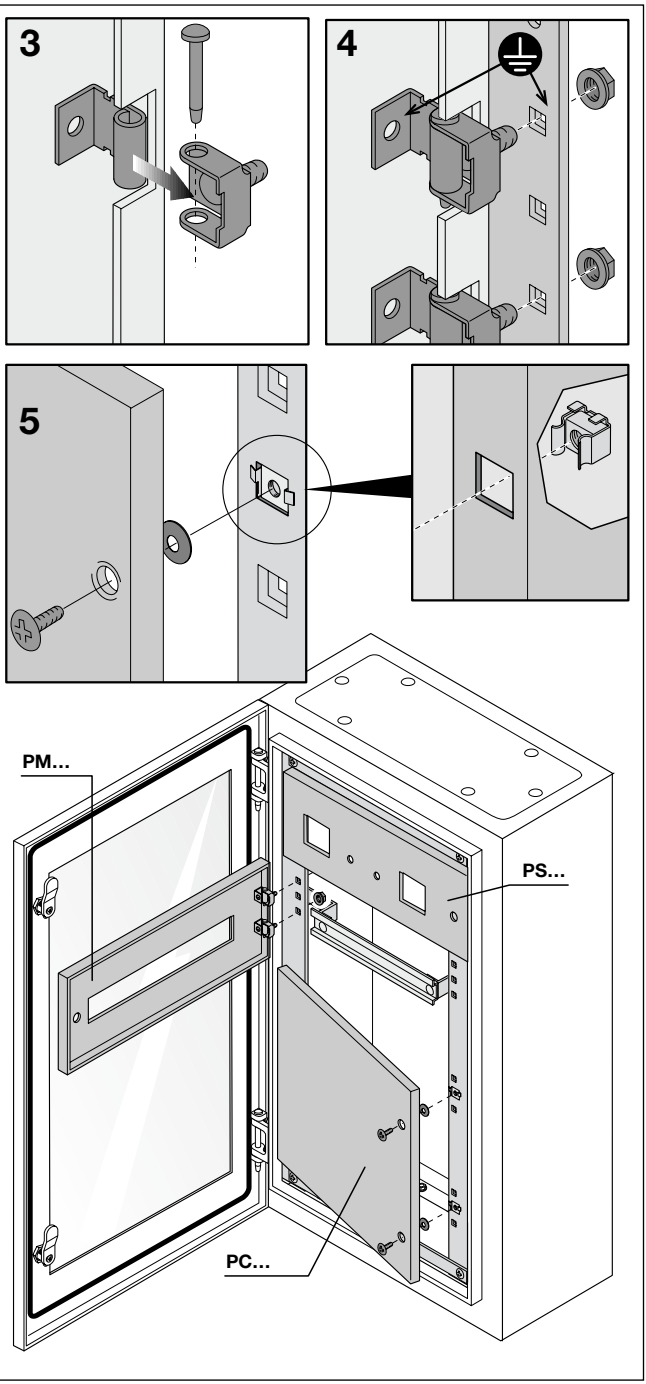

ZA4020-ZA4025-ZA6025-ZA6030
ZA8030

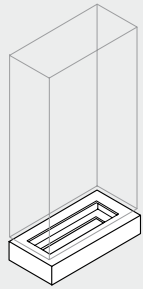

8xM6



GZ4020-GZ4025-GZ6025-GZ6030-
GZ8030

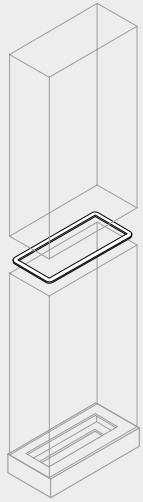

8xM6

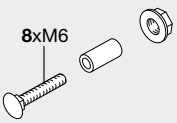

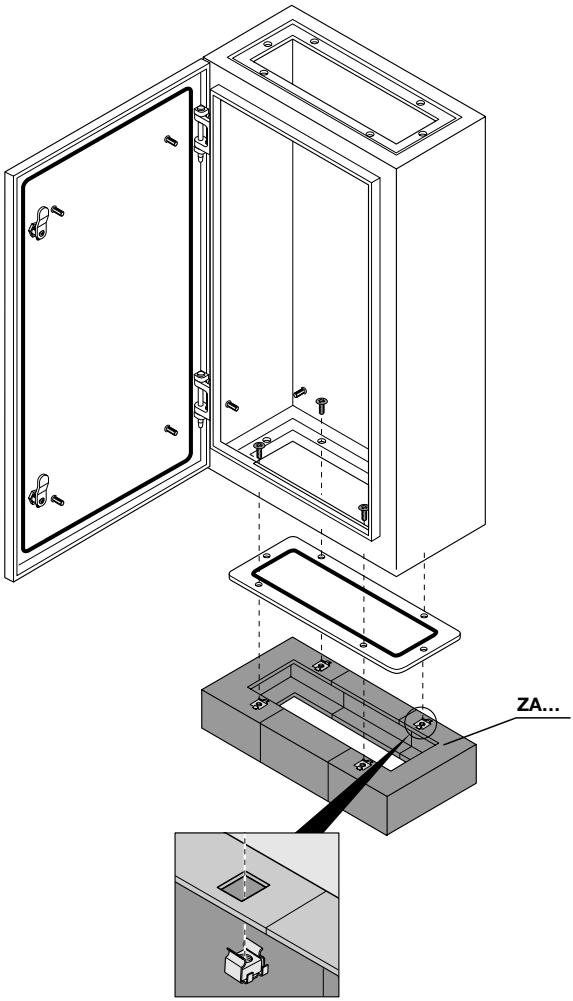

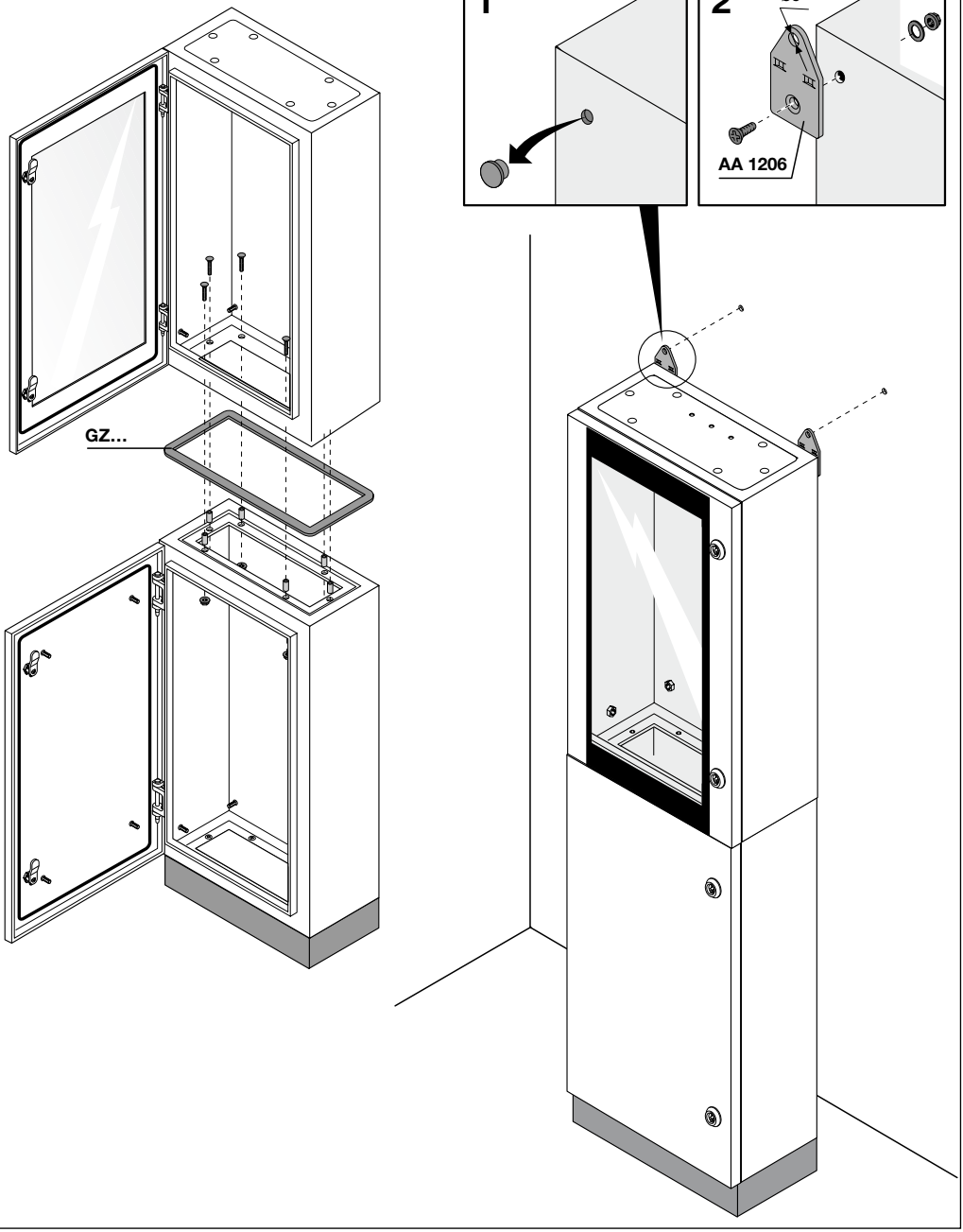
1
2
ø9
AA 1206
GZ...

CODE	PAG.
AA1206	8
AA5190	7
AA5200	7
AA8001	7
AA8002	7
AA8003	7
AA8010	11
AA8011	11
AA8025	10
AA8050	10
AP6001	14
EV1008	7
EV1036	7
EV1037	7
EV1039	7
GD4006	14
GD6006	14
GD8006	14
GZ4020	16
GZ4025	16
GZ6025	16
GZ6030	16
GZ8030	16
KC1060K	13
KC1080K	13
KC1260K	13
KC1280K	13
KC5040K	13
KC6040K	13
KC7050K	13
KC8060K	13
KD1060K	14
KD1080K	14
KD1260K	14
KD1280K	14
KD5040K	14
KD6040K	14
KD8060K	14
PC1406K	15
PC1606K	15
PC1806K	15
PC2606K	15
PC2806K	15
PF1060	10
PF1080	10
PF1260	10
PF1280	10
PF3020	10
PF3030	10
PF3040	10
PF4030	10

CODE	PAG.
PF4040	10
PF4060	10
PF5030	10
PF5040	10
PF6040	10
PF6060	10
PF7050	10
PF8060	10
PF8080	10
PM1414K	15
PM1625K	15
PM1836K	15
PS2476K	15
PS2676K	15
PS2876K	15
SR10830EMCK	6
SR4620EMCK	6
SR6625EMCK	6
SRN10625K	6
SRN10625VK	6
SRN10630K	6
SRN10630VK	6
SRN10830K	6
SRN10830VK	6
SRN12630K	6
SRN12630VK	6
SRN12830K	6
SRN12830VK	6
SRN3215K	6
SRN3315K	6
SRN3415K	6
SRN4315K	6
SRN4320K	6
SRN4420K	6
SRN4620K	6
SRN5320K	6
SRN5420K	6
SRN5420VK	6
SRN5425K	6
SRN5425VK	6
SRN6420K	6
SRN6420VK	6
SRN6425K	6
SRN6425VK	6
SRN6625K	6
SRN7520K	6
SRN7520VK	6
SRN7525K	6
SRN7525VK	6
SRN8625K	6
SRN8625VK	6

CODE	PAG.
SRN8630K	6
SRN8630VK	6
SRN8830K	6
TQ1060	10
TQ1080	10
TQ1260	10
TQ1280	10
TQ3020	10
TQ3030	10
TQ3040	10
TQ4030	10
TQ4040	10
TQ4060	10
TQ5030	10
TQ5040	10
TQ6040	10
TQ6060	10
TQ7050	10
TQ8060	10
TQ8080	10
TS6009	12
TS7009	12
TS8009	12
TT2015K	9
TT3015K	9
TT3020K	9
TT4015K	9
TT4020K	9
TT4025K	9
TT5020K	9
TT5025K	9
TT6020K	9
TT6025K	9
TT6030K	9
TT8030K	9
ZA4020	16
ZA4025	16
ZA6025	16
ZA6030	16

ABB SACE
A division of ABB S.p.A.
Automation and Distribuition Boards
Via Italia, 58
23846 Garbagnate Monastero (LC) - Italy
Tel.: +39 031 3570 1
Fax: +39 031 3570228
www.abb.com

1STM6041230001 - 10/09 - 5000

Certificato N°OHS-015

RINA
OHSAS 18001
Certified Health & Safety System

Certificato N°1612/98/S

Member of CISQ Federation
RINA
ISO 9001:2000
Certified Quality System

Certificato N° EMS-051

Member of CISQ Federation
RINA
ISO 14001:2004
Certified Environmental System

Certificato N°SGI004

RINA
ISO 9001 - ISO 14001
OHSAS 18001
Certified Integrated Systems

Power and productivity
for a better world™