MR0902

T-slot cylinder sensor with reed contact

MRI3021-BKOA/R/AS

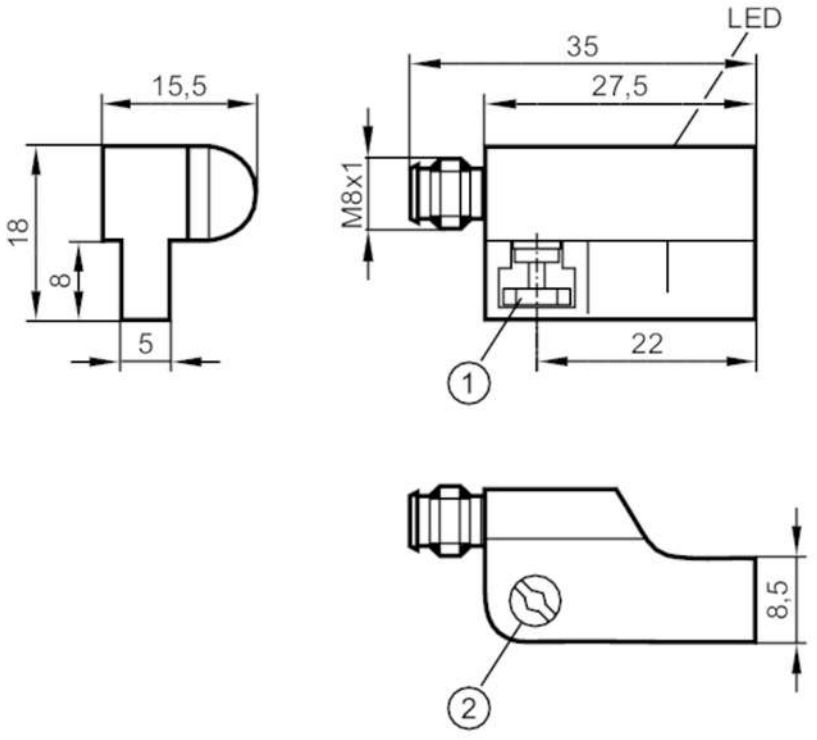

1 Fixing element
2 combined head screw for fixing element

Product characteristics		
Electrical design		PNP
Output function		normally open
Dimensions	[mm]	27.5 x 18 x 15.5
Electrical data		
Operating voltage	[V]	5...50 AC / 5...60 DC; (cULus supply class 2: 5...30 AC / 5...60 DC)
Protection class		III
Reverse polarity protection		yes
Reverse polarity protection		yes
Outputs		
Electrical design		PNP
Output function		normally open
Max. voltage drop switching output DC	[V]	2.5
Max. voltage drop switching output AC	[V]	2.5
Permanent current rating of switching output AC	[mA]	350
Permanent current rating of switching output DC	[mA]	500
Switching frequency AC	[Hz]	1000
Switching frequency DC	[Hz]	1000
Max. switching power	[W]	10

MR0902

T-slot cylinder sensor with reed contact

MRI3021-BKOA/R/AS

Short-circuit protection		no	
Short-circuit proof		no	
Overload protection		no	
Detection zone			
Response sensitivity	[mT]	2.1	
Travel speed	[m/s]	10	
Accuracy / deviations			
Hysteresis	[mm]	1	
Repeatability	[mm]	< 0.2	
Response times			
Max. fall time	[ms]	0.1	
Max. make time incl. bounce	[ms]	0.6	
Operating conditions			
Ambient temperature	[°C]	-25...70	
Protection		IP 65; IP 67	
Tests / approvals			
EMC		EN 61000-4-2 ESD	- CD / 8 kV AD
		EN 61000-4-3 HF radiated	10 V/m
		EN 61000-4-4 Burst	2 kV
		EN 61000-4-5 Surge	0,5 kV line to line, Ri: 2 Ohm
		EN 61000-4-6 HF conducted	10 V
		EN 55011	class B
MTTF	[years]	17837	
Mechanical data			
Weight	[g]	12.4	
Mounting		non-flush mountable	
Type of mounting		fixing element with combined head slot / hexagon socket AF 1.5	
Cylinder type		T-slot cylinders	
Dimensions	[mm]	27.5 x 18 x 15.5	
Materials		housing: PA; Fixing element: stainless steel / brass	
Switching cycles when connected to PLC	[Mio]	< 40	
Displays / operating elements			
Display		switching status	1 x LED, yellow
Electrical connection			
Required protection		miniature fuse to IEC60127-2 sheet 1; ≤ 0,175 A; fast acting	
Accessories			
Items supplied		rubber placeholder: 1	
Remarks			
Remarks		Recommendation: Check the safe functioning of the unit after a short circuit.	
		operating voltage "supply class 2" according to cULus	
Pack quantity		1 pcs.	

MR0902

T-slot cylinder sensor with reed contact

MRI3021-BKOA/R/AS

Electrical connection - plug

Connector: 1 x M8; coding: A; Locking: snap-fit

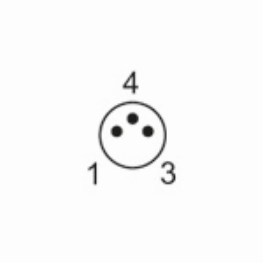

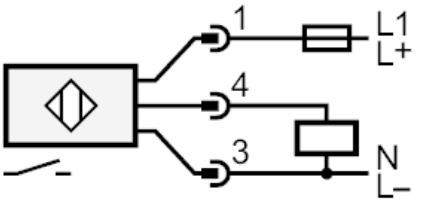

Note miniature fuse to IEC60127-2 sheet 1 ≤ 0.175 A fast acting