PRODUCT DETAILS

**ARTICLE: 12258G**

# WHEEL BG 100X30/40 RB SWIVEL FORK M22



### Wheel series BG

Wheels with elastic grey rubber ring on welded steel discs with ball bearings, roller bearings or nylon friction bearings.
Wheel fitted with standard roller bearing.

### Castor series M22

M22 series, Medium-light pressed steel fork assemblies; swivel version has double ball raceways. Zincplated.

### Technical data

| | | |
|---|---|---|
| Wheel diameter | D | 100 mm |
| Tyre width | E | 30,0 mm |
| Bore diameter | d | 12 mm |
| Weight article | | 0,830 kg |
| Hub width | L | 40 mm |
| Overall height | H | 128 mm |
| Top plate outer dimensions | AxB | 102x83 mm |
| Bolt hole spacing | axb | 76x55 mm |
| Bolt hole spacing | axb | 80x60 mm |
| Fixing bolt diameter | g | M8 |
| Offset | F | 37 mm |
| Fork width | U | 40 mm |
| Load Capacity | | 90 kg |

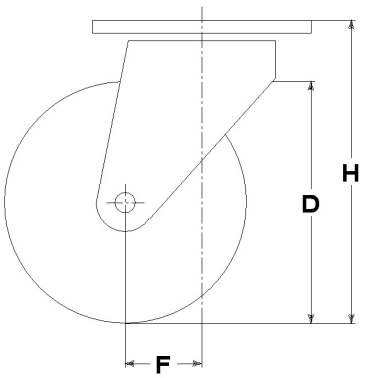


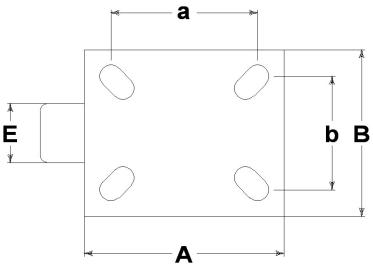


**Related Articles**

Spare part wheel: 12058G
Version with trailing brake: 12258GFR

**GENERAL INFORMATION / RECOMMENDATIONS AND WARNINGS**
The cited text and the complete catalogue in their most up-dated versions are available in the OEM's website page www.lagspa.it/downloads. The dimensions, descriptions, specifications and illustrations herein are indicative and subject to variations without notice. The fact that products are illustrated herein does not necessarily imply they are available from stock nor does it place us under any obligation to supply them.
Tests carried out refer to the original products with original accessories: the replacement of one of the components with others of different manufacture might prevent the same results from being achieved and will automatically invalidate any guarantee. Please contact our technical service concerning any special application.