PYRA® COMPACT MULTIFUNCTIONAL LED LIGHT
PY L-S / PY L-S RGB



Most flexible, ultra bright RGB multi colour or single colour LED technology

- Selectable signaling modes: continuous-, blinking- and flashing-light
- Selectable Colour (RGB version only) PYRA® LED RGB permits to choose the colour you require. Stay flexible and keep your stock to a minimum!
- External colour & mode control (RGB version only) with PYRA® LED RGB you can state several situations with only one light. Change colour and mode easily by remote control!
- Selectable blink & flash frequencies - Adaptable to all your applications - select the frequency your gadget requires and boost the perceptibility.
- Multi-voltage-power supply - Plug and play PYRA® LED adapts to most machines and applications no matter the voltage!
- Panel mount installation - Flat, smart, discrete, clean and 360° visible - fully integrable into the design of your machine and equipment!

RGB — multi colour LED (option)
IP 66 — protection system
IK08 — impact-proof housing
+55 °C / –40 °C — operating temperature
brightness adjustable
10 Years — warranty
EAC — EurAsian Conformity
NEMA 4/4X — protection system
UL — UL approval
M12 — connector (option)

3D-COVERAGE PERFORMANCE DATA	PY L-S	PY L-S RGB
Indicate	35.1 x 14.9 x 14.2 m	17.1 x 14 x 13.5 m
Warn	15.6 x 6.6 x 6.4 m	7.6 x 6.2 x 6 m
Alarm	7.8 x 3.3 x 3.2 m	3.8 x 3.1 x 3 m

To determine the exact signalling area for your needs, please use the online available Pfannenberg Sizing Software PSS.

PRODUCT	PY L-S / PY L-S RGB			
DATA				
Rated voltage	115 / 230 V	120 V DC	24 V AC	12–48 V DC
	AC 50 I 60 Hz / DC	–	50 / 60 Hz	–
Operating range	95–265 V	108–132 V	21.6–26.4 V	11–60 V
Current consumption (@ 1 Hz flash)	36 mA @ 230 V AC	25 mA @ 120 V DC	167 mA @ 24 V AC	120 mA @ 24 V DC
Operating mode internally and externally selectable (DC)	continuous light / blinking light / flashing light			
Light alternation frequency	blinking light 1 Hz / 2 Hz I flashing light 0.1 Hz / 0.5 Hz / 0.75 Hz / 1 Hz / 2 Hz			
Light source	one high output LED			
Light intensity (DIN 5037) [1]	76 cd (reducible)			
Max. viewing distance	202 m			
Operating temperature	–40 °C ... +55 °C			
Storage temperature	–40 °C ... +70 °C			
Installation position	any			
Degree of protection	IP 66 (EN 60529), NEMA TYPE 4/4X, IK 08 (EN 62262)			
Service life of the light source	≥50,000 hrs			
Material – lens	(- RGB) polycarbonate (PC)			
Material – housing	PC / ABS blend			
Cable entry	4 x M20 pre-embossed			
Connecting terminal	0.14 - 2.5 mm² fine stranded			
Weight	265 g			

[1] with a clear lens

DIMENSIONS

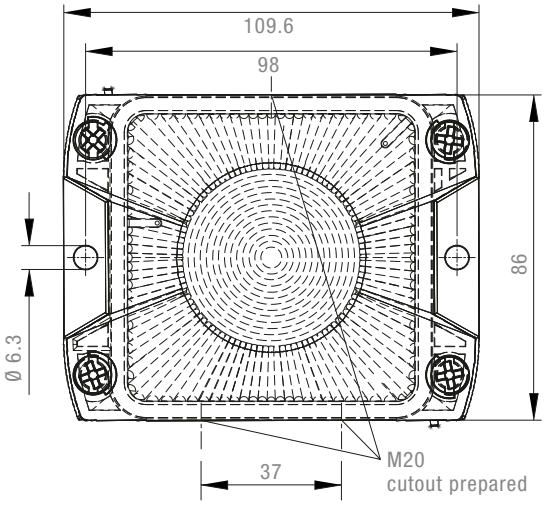

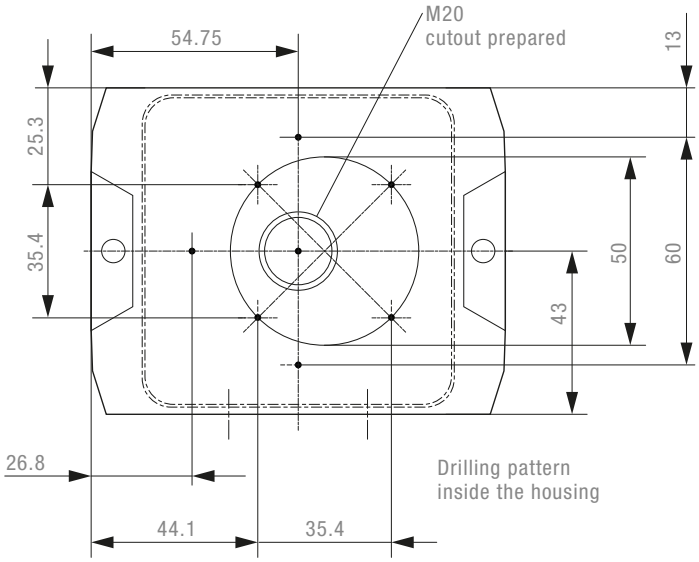

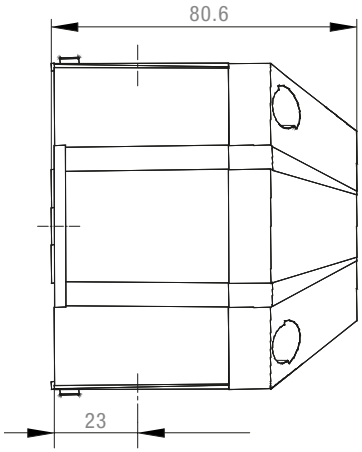

ARTICLE NO.		PY L-S / PY L-S RGB	
HOUSING COLOUR	LIGHT / LENS COLOUR	115 / 230 V AC; 120 V DC	12-48 V DC
	/	21513648055	21513818055
		21513643055	21513813055
		21513644055	21513814055
		21513645055	21513815055
		21513646055	21513816055

Article numbers for other colours and voltages on request.

OPTIONS / ACCESORIES

Sealing plug, 4-pack	28300000002
Spare locking bolt, 4-pack	28912000000
Surface seal	28300000004
Control panel installation kit PY L-S	28112000042
Control panel installation kit PY L-S RGB	28112000043

Version with M12 connection on request

CONFORMITY TO STANDARDS

The visual characteristics of flashing lights conform to the European standard DIN EN 842; **“Machine safety – visual alarm signals”.**
Requirements contained in the DIN EN 981 standard; **“Machine safety – system of acoustic and visual alarm and information signals”,** can be fulfilled.

The colours “red” for the emergency signal and “yellow” for the warning signal conform to the requirements of IEC 73 / DIN EN 60073 / VDE 0199; **“Coding of display devices and control elements using colours and supplementary means”.**

References to visual alarm devices can be found in the following standards:

EN 60825-1	Radiation safety of laser devices, identical to IEC 825 and DIN-VDE 0837
DIN EN 54	Fire alarm systems
DIN 54113-2	Radiation protection regulations for the technical operation of X-ray equipment up to 500 kV