

COUNTIS E4x

Active energy meters

three-phase - connection to current transformers up to 12000 A



COUNTIS E44 - MID

Function

The **COUNTIS E4x** is a modular electrical energy meter displaying the energies (kWh, kVArh and kVA) and other measurements directly on its backlit LCD display. It is designed for three-phase load metering with connection via CT and is suitable for applications of up to 12000 A.

COUNTIS E42, E44, E46 and E48 are MID certified.

Common characteristics

- Measurement accuracy: 1 % / 0,5%(MID).
- Backlit LCD display.
- Multi-measurement available on display.

Principle diagram

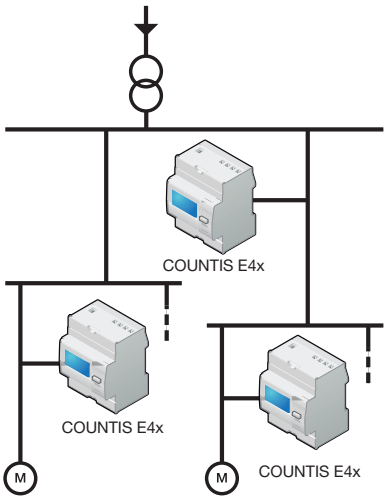

Advantages

RS485 (MODBUS), M-BUS, Ethernet communication or pulse outputs

To enable the remote reporting of energy consumption, COUNTIS E4x devices have either one pulse output, one RS485 (MODBUS), M-BUS or an Ethernet Modbus TCP communication output.

In addition to their reporting functions, COUNTIS E4x with RS485 and Ethernet can be configured remotely and enable access to multi-measurement values.

MID certified B+D module

COUNTIS E products with MID certification provide the guaranteed accuracy required for applications in which sub-billing of the electrical energy consumed is necessary. “Module B+D” certification guarantees that the design and manufacturing process of products are approved by an accredited laboratory.

Bi-directional metering

This function is for metering energy production or energy consumption.

Multi-measurement and load curve

Display of electrical values (I, U, V, P, Q, S, PF) and load curve over a 3 day period via communication.

Models	Key functions
E41	Dual tariff + Pulse output
E42	Dual tariff + Pulse output + MID
E43	4 tariffs + Pulse output + RS485 MODBUS communication
E44	4 tariffs + Pulse output + RS485 MODBUS communication + MID
E45	4 tariffs + Pulse output + M-BUS communication
E46	4 tariffs + Pulse output + M-BUS communication + MID
E47	4 tariffs + Pulse output + Ethernet
E48	4 tariffs + Pulse output + Ethernet + MID

The solution for

- Industry
- Infrastructure
- Data centre
- EV Chargers



Strong points

- RS485 (MODBUS), M-BUS, Ethernet or pulse outputs
- Multi-tariff
- MID certified B+D module
- Bi-directional metering
- Multi-measurement and load curve

MID certification

- COUNTIS E comply with the MID directive, guaranteeing accuracy and reliability when metering, an indispensable function for energy billing applications.
- COUNTIS E MID feature tamper-proof components to prevent fraud.

Conformity to standards

- IEC 62053-21 class 1
- IEC 62053-23 class 2
- IEC 62053-31
- IEC 62053-11
- EN 50470-1
- EN 50470-3

Associated with current transformers



See “Current transformers”.

socomec Innovative Power Solutions

Front panel



count_347x_b_1_cat.eps

1. Terminal shrouds (COUNTIS E42, E44, E46 and E48).
2. Backlit LCD display.
3. Navigation button.
4. ENTER key.
5. Metrological LED.
6. Current, voltage terminals and terminal shrouds (COUNTIS E42/E44/E46/E48).

Dimensions (mm)

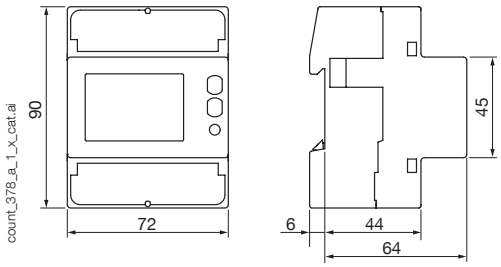

count_378_a_1_x_cat.ai

Type	modular
Number of modules	4
Dimensions W x H x D	72 x 90 x 64 mm
Case degree of protection	IP20
Front degree of protection	IP51
Display type	8-digit backlit LCD
Rigid cable cross-section	1.5 … 6 mm²
Flexible cable cross-section	1.5 … 6 mm²
Weight	322 g

Connection

Recommendation:

- Connecting the CT secondaries is strictly prohibited in IT earthing systems; it is however optional in TT/TN earthing arrangements.
- When disconnecting the COUNTIS, the secondary of each current transformer must be short-circuited. This operation can be carried out automatically by a SOCOMEC PTI, an accessory which is included in this catalogue. Please consult us.

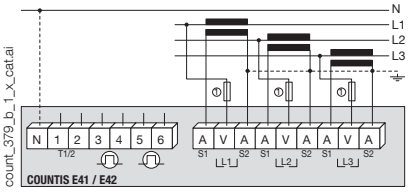

count_379_b_1_x_cat.ai

WARNING: The neutral conductor must be connected on models COUNTIS E43/E44/E47/E48 (the neutral conductor is represented by the solid line in the image opposite).

The neutral conductor is optional on models COUNTIS E21 / E22 / E25 / E26 (the neutral conductor is represented by the dashed line in the image opposite).

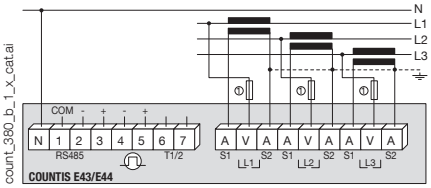

count_380_b_1_x_cat.ai

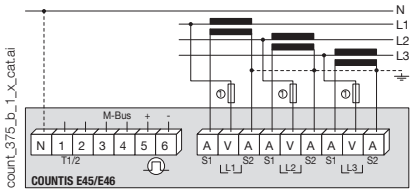

count_375_b_1_x_cat.ai

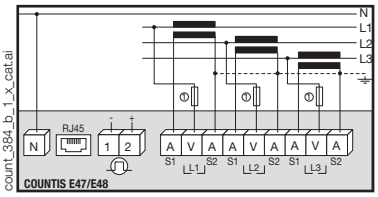

count_384_b_1_x_cat.ai

1. Fuses 0.5 A gG / 0.5 A class CC.

Electrical characteristics

Current measurement	
Type	three-phase on CT1 and 5A up to 12000 A
Input consumption	0.5 VA max. per phase
Startup current (I_{st})	1 mA - Class C 2 mA - Class 1
Minimum current (I_{min})	10 mA
Transition current (I_{tr})	50 mA
Reference current (I_{ref})	1 A
Permanent overload (I_{max})	6 A
Intermittent overload	120 A for 0.5 s
Voltage measurement	
Range of measurement	230 … 240 V ± 20 %
Consumption (VA)	7.5 VA max (0,5 W) per phase E41/E42/E45/E46 3.5 VA max (1 W) per phase E43/E44/E47/E48
Permanent overload	290 V phase-neutral / 500 V phase-phase
Energy accuracy	
Active (according to IEC 62053-21)	Class 1
Active (according to EN 50470)	Class C
Reactive (according to IEC 62053-22)	Class 2
Power supply	
Self-supplied	yes
Frequency	50 / 60 Hz
Output (pulse)	
Number	2 (E41/E42) 1 (E43 ... E48)
Type of optoisolated	250 VAC/DC - 100 mA (E41/E42) 27 VDC - 27 mA (E43 ... E48)
Pulse weight	1 Wh ⇨ CT = 1 ... 4 5 Wh ⇨ CT = 5 ... 24 25 Wh ⇨ CT = 25 ... 124 125 Wh ⇨ CT = 125 ... 624 1000 Wh ⇨ CT = 625 ... 3124 10000 Wh ⇨ CT = 3125 ... 12000
Pulse duration	50 ± 2 ms ON time 30 ± 2 ms OFF time
Operating conditions	
Operating temperature	-25 … +55 °C
Storage temperature	-25 … +75 °C
Relative humidity	80 %

Communication	COUNTIS E43/E44	COUNTIS E45/E46	COUNTIS E47/E48
Link	RS485	Wired	RJ45
Type	2 to 3 half duplex	2 half duplex	Full duplex
Protocol	MODBUS RTU	M-BUS	MODBUS TCP, HTTP, NTP, DHCP
Speed	1200 … 115200 bauds	300 … 9600 bauds	10/100 Mbps

References

Type	COUNTIS E41 Reference	COUNTIS E42 Reference	COUNTIS E43 Reference	COUNTIS E44 Reference	COUNTIS E45 Reference	COUNTIS E46 Reference	COUNTIS E47 Reference	COUNTIS E48 Reference
Via CT - Dual tariff	4850 **3063**							
Via CT - Dual tariff + MID		4850 **3064**						
Via CT - Dual tariff + MODBUS communication via RS485[1]			4850 **3065**					
Via CT - Dual tariff + MODBUS communication via RS485 + MID[1]				4850 **3066**				
Via CT - Dual tariff + M-Bus communication[1]					4850 **3067**			
Via CT - Dual tariff + M-Bus communication + MID[1]						4850 **3068**		
Via CT - Dual tariff + Ethernet Modbus TCP communication[1]							4850 **3056**	
Via CT - Dual tariff + Ethernet Modbus TCP communication + MID[1]								4850 **3057**

(1) 4 tariffs through RS485 communication.

Accessories	To be ordered in multiples of	Reference
Panel mounting kit 4 modules		192J **8015**
10x 4U sealing kits		4850 **309U**
Fuse disconnect switches to protect 3-pole voltage inputs (RM type)	2	5701 **0018**
gG 10x38 0,5 A fuses	10	6012 **0000**