

Version of 05/17/2022

XALIS 1000

Strain Gauge Indicator



AC DC
Universal power supply

Sensor power supply

Mod BUS
ModBus RTU

Presentation

XALIS 1000 is a digital indicator with two-color display dedicated to Strain-gauge measurements.

Flush-mount housing (IP65 48mm x 96mm x 85mm) equipped with plug-in connectors and a USB socket on the back.

XALIS 1000 is guaranteed for **5 years**

Range

Indicator reference	**Strain gauge input**	**Outputs**				**Communication**
		Number of analog		Number of relay		
	1 input	1	2	2	4	RS485 USB
XALIS 1000U1	✓	✓				✓
XALIS 1200U1	✓	✓		✓		✓
XALIS 1400U1	✓	✓			✓	✓
XALIS 1400U2	✓		✓		✓	✓



Factory Settings

Input	**Outputs (1&2)**	**Relays (2 RT or 4T)**
±300mV	4-20mA	Alarm: High
		Threshold: 50
Display: 0.00 -100.00	Display: 0.00 -100.0	

Communication speed: 9600 bauds, Slave address: n°1

Other settings on demand

Inputs - Outputs

Input gauges

Voltage (continuous)	Standard scales: ±18mV, ±35mV, ±75mV, ±150mV, ±300mV, ±600mV, ±1V, ±2V Adjustable scales: ±18mV ; ±35mV ; ±75mV ; ±150mV ; ±300mV ; ±600mV ; ±1V ; ±2V
Strain gauge supply	Adjustable strain gauge excitation voltage from 2Vdc to 10Vdc Minimum of load impedance: 100Ω Max consumption of the bridge: • 100mA at 10V: Bridge impedance 100Ω minimum • 50mA at 5V: Bridge impedance 200Ω minimum

Output gauges

Output 1 Current	Standard scales: 0-10mA ; 0-20mA ; 4-20mA Adjustable scales: from 0 to 22mA
Output 1 Voltage	Standard scales: 0-10V ; 0-5V ; 1-5V ; 2-10V Adjustable scales: from 0 to 11V
Output 2 Voltage	Standard scales: 0-10V ; 0-5V ; 1-5V ; 2-10V ; ±10V Adjustable scales: from -11 to 11V
Output Relay	2 or 4 Relays 1RT: 2A-250Vac
Input Digital Contact	Potential-free contact for input calibration
Communication	Isolated USB in Front Panel / isolated RS485 Modbus RTU

Characteristics

Display	
Type	Two-color digital and alphanumeric display
Color	Choice of color for the numeric or alphanumeric line
Number of characters	5 in numeric and 9 in alphanumeric
Number of lines	2
Programming keys	4 keys
Inputs characteristics	
Voltage input impedance	>10MΩ
Output characteristics	
Permissible impedance on the current output 1	<300Ω
Permissible impedance on the current output 2	<600Ω
Permissible impedance on the voltage output 1	>700Ω
Permissible impedance on the voltage output 2	>600Ω
Isolation	
Supply / Input - Output(s)-Relay- RS485 - USB	4200Vrms, 50Hz, 1mn
Output 2 / Input-relay-RS485-USB-output 1	1500Vrms, 50Hz, 1mn
Output 1 / relay / RS485 / USB-Input	2500Vrms, 50Hz, 1mn
USB / Input	Without
Auxiliary source	
Voltage supply	22-240Vdc or 90-230Vac 50/60Hz

General characteristics	
Precision class	0,1
Input analog / digital conversion	24 bits
Output analog / digital conversion	16 bits
Response time	4 wires or 6 wires mounting: <200ms
Thermal drift	<25ppm
Residual ripple on current output	<20µA
Residual ripple on voltage output	<10mV
Maximum of consumption	<13,25VA
Operating temperature	-10°C … +60°C
Storage temperature	-25°C … +80°C
Protection factor	IP65 (front Panel) Self-extinguishing black ABS enclosure V0

Options listing

Option	Device code
Tropicalization	XALIS 1XXXXX-T
Auxiliary source 20-60Vac	XALIS 1XX9XX

Functions

Display functions	
Display	Two-colour digital and alphanumeric display. Possibility of switching off each of the display lines independently
Color	Choice of color for the numeric or alphanumeric line
Color change	Possibility of automatic color change when a defined threshold is reached
Programming	Programming via keys on the front panel, or via USB with **IXLOG** software
Unit	Choice from a list of units
Memory Mini / Maxi	Storage of the maximum and minimum value of the measurement on each input channel
Customizing the display	Resolution, Comma, Display off
Input	
Inputs display	The display allows to visualize the input in physical value and in programmed value (gross value measured or on the displayed value)
Adjustable input scale	Allows to zoom on the input either in manual or automatic mode
Offset	Manual adjustment of the input offset
Taring	Taring function at process input (by validation)
Cut-off	Threshold below which the input is considered as null
Smart functions	
Sensor signal loss	Translates the sensor signal loss on: • the display, • each of the analog outputs, • the digital output, • the status of the relays
Filtering	Integration of the measurement over the defined time (in seconds)
Pilot function/simulation	The pilot function makes it possible to act on the display value influencing the output(s), independently of the input The Pilot function is activated either by the digital link (RS485 or USB) or by the keys on the front panel
Segmentation in 99 points	Linearization in 99 points (free choice for each point), allows to create an output function by segmentation of the signal of each input channel

Outputs	
Visualization of the outputs	The display allows to visualize the outputs, in physical value and percentage; as well as the status of the relays
Outputs assignment	Assignment of outputs to inputs or to the control function, independently for each channel
Adjustable output scale	Allows you to zoom in on the outputs
Outputs limitation	Possibility to limit the value of the outputs - High limit and Low limit
Relays assignment	Assignment of relays to inputs or to the control function, independently for each channel
Thresholds	Single or band mode, with positive or negative safety Adjustment of thresholds, hysteresis and time delay (independent on rise or fall) Direct access to the thresholds
Acknowledgement of alarms	Independently for each alarm
Storage of alarms and/or relay status	Independently for each alarm
Links and communication	
RS485 MODBUS RTU	RS485 MODBUS RTU bidirectional digital link allowing to: • recover the measurements and transmit them in digital format • configure and control the device
Digital bus	Access to the digital bus via the USB socket
USB rear	USB rear panel to connect directly to the USB port of a PC for programming via the **IXLOG** software
Mapping of Modbus addresses	Mapping of Modbus addresses, allowing you to choose your own variable address

Dimensions and wiring

Dimensions

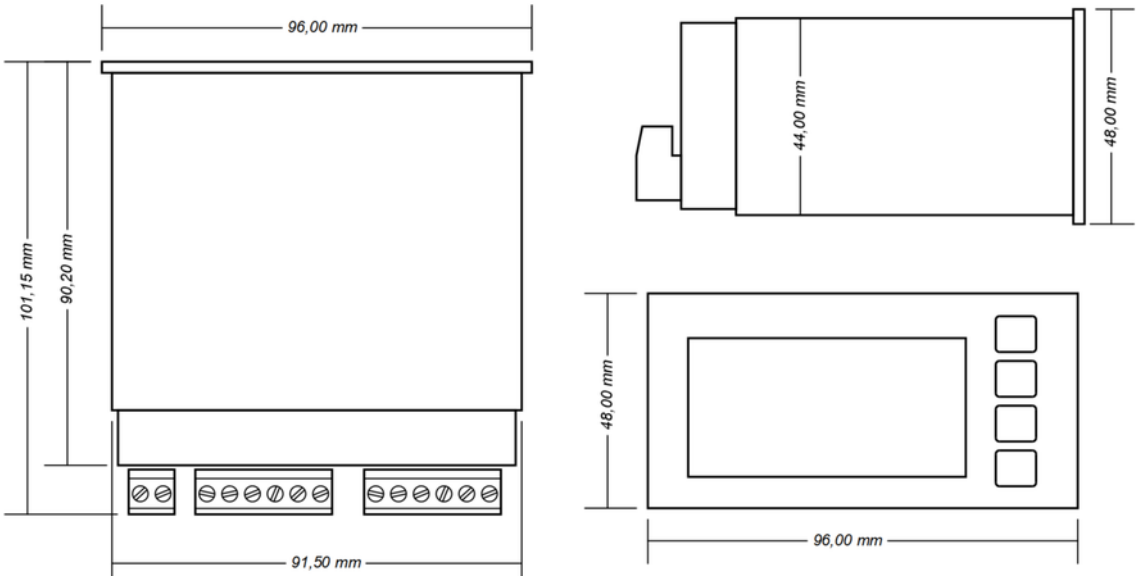

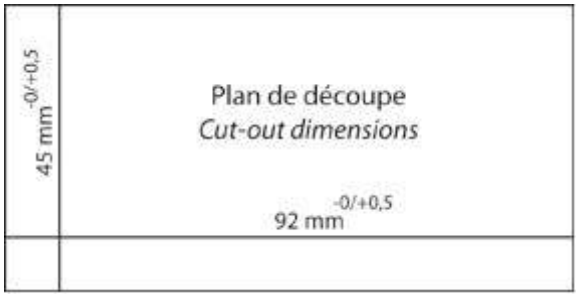

Dimensions : 48mm x 96mm x 85mm

Wiring

XALIS 1000U1

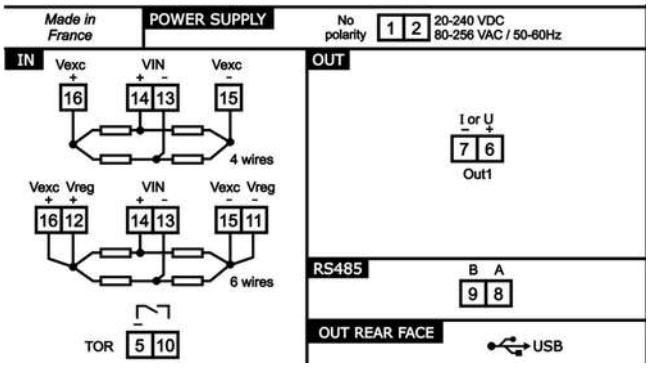

XALIS 1200U1

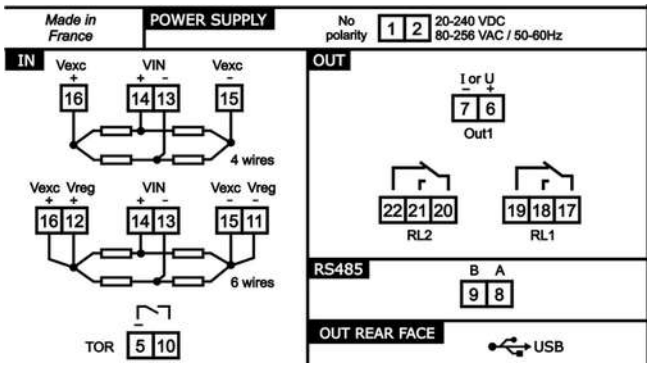

XALIS 1400U1

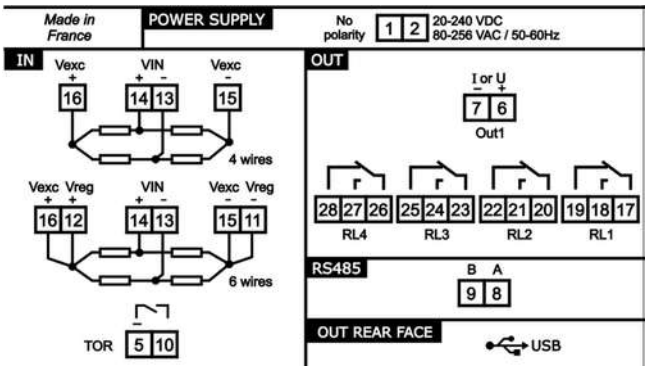

XALIS1400U2

