A100 Alarm Horn Sounder

The A100 is a compact, high output, 110dB(A) alarm sounder. CPR complaint, EN54-3 tested and UL/cUL and ULC approved. Featuring 64 alarm tone frequencies and 4 remotely activated stages/channels.

Low current consumption and high SPL in a robust fire retardant housing ensure the A100 is suitable for all signalling applications including fire, security and process control. The A100 is a member of the versatile AlertAlarm family of industrial alarm horn sounders – also available with Xenon, AL100X or LED beacons, AL100H.

Features

- Automatic synchronisation
- Continuously rated
- Back box options with and without mounting lugs
- Dual M20 or 1/2"NPT clearance cable entries
- Duplicate pluggable cable terminations – Class A
- Ingress protection IP66 Type 3R/13
- Conformal coated (tropicalised) electronics
- 64 alarm tone frequencies and 4 remotely activated alarm stages
- Available with custom tone configurations and frequencies
- Diode polarized for use in supervised circuits



Approvals

- UL: UL464
- cUL: CSA C22.2 No 205-17
- ULC: CAN/ULC-S525
- UL EU: (EN54-3) UL-EU-01163-CPR
- CPR 305/2011: 2821-CPR-0107
- EAC CU TR 043/2017: B.00291/21
- EAC: RU D-GB.GA05.B.12595-20
- RMRS Marine: No. 19.00193.278
- CE, UKCA



Specification

Maximum output:	110dB(A) @ 1 m ±3dB [101dB(A) @ 10ft/3m ±3dB]
Nominal output:	102dB(A) @ 1m ±3dB [93dB(A) @ 10ft/3m ±3dB]
No. of tones:	64 (UKOOA / PFEER compliant)
No. of stages:	4
Volume control:	-12dB(A) tone dependent
Effective range:	38m/124ft @ 1KHz
Voltages DC:	10-60V dc
Voltages AC:	24-260V ac 50/60Hz / 60-260Vdc
In rush:	636mA within 4.0ms @ 24Vdc
Stage switching:	Negative (common positive)
Ingress protection:	IP66 Type 3R/13
Enclosure:	High impact UL94 V0 & 5VA FR ABS
Terminals:	0.5 – 2.5mm² (20-14 AWG)
Line monitoring:	Diode polarized for use in supervised circuits
Operating:	-40 to +66°C [-40° to +151°F]
Storage:	-40 to +70°C [-40° to +158°F]
Relative humidity:	95% at 20°C [68°F]
Vibration test:	35Hz for a duration 4Hr (UL464)
Jarring test:	3ft/lb Energy (UL464)
Impact test:	3x 5lb (UL464)
MTBF DC:	225.16 years / 1,972,386 hours – MIL 217
MTBF AC:	138.96 years / 1,217,285 hours – MIL 217
Weight DC:	0.26kg / 0.57lbs
Weight AC:	0.37kg / 0.81lbs

Part Codes

Variable:	Identifier:	Description:
Product type:	A100	Alarm horn sounder
Voltage:	DC024 AC230	10-60Vdc 24-260Vac 50/60Hz / 60-260Vdc
Back box/cable entries: [e]	B M S	Back box without mounting lugs – 1 x rear 20mm entry Back box with mounting lugs – 2 x M20/1/2"NPT clearance Back box without mounting lugs – 2 x M20, 1/2"NPT clearance
Stopping plug material: [m]	A X	ABS No stopping plug – B type back box only
Equip. tag/Duty label: [s]	0 1 2	No equip. tag or Duty label 316 (A4) St/St Equip. tag/Duty label Metalised Polyester Equip. tag/Duty label
Product version: [v]	A	UL/cUL, ULC, CPR, RMRS, EAC, CE, UKCA
Product option: [o]	1 X Z	Standard product Custom configuration – contact E2S Custom alarm tone software – contact E2S
Enclosure: [x]	R G W	Red (RAL 3000) Grey (RAL7038) White

Current Consumption

Product Version:	Nominal Voltage:	Voltage Range:	Current Consumption:
DC024	12Vdc 24Vdc 48Vdc	10-60Vdc	17mA 33.5mA 113mA
AC230	115Vac 50/60Hz 230Vac 50/60Hz	24-260Vac 60-260Vdc	25mA 17mA

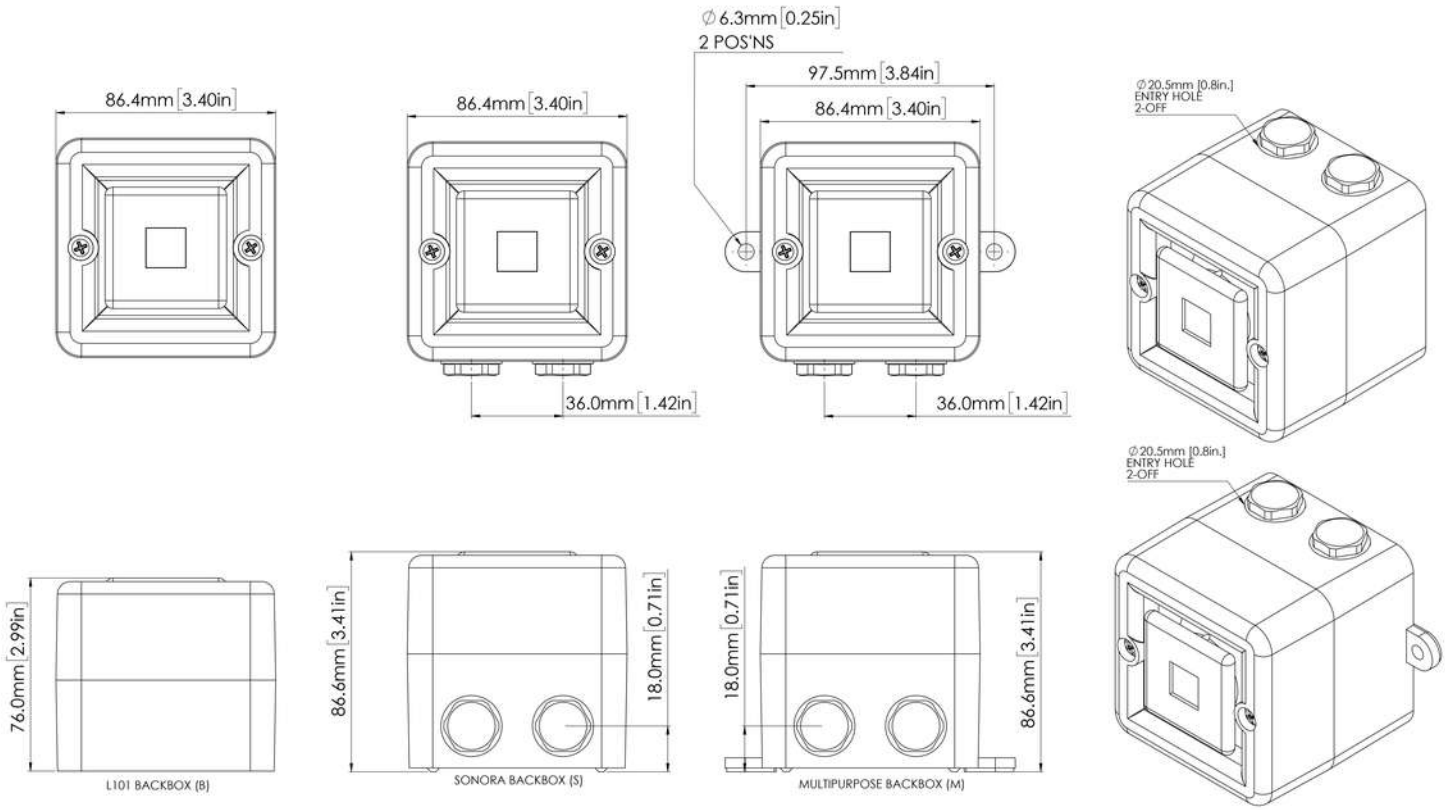

Tone table

S 1	Description	S 2	S 3	S 4
T 1	1000 Continuous - PFEER Toxic Gas	Any	T 2	T 44
T 2	1200/500 @ 1Hz Sweeping - DIN / PFEER P.T.A.P.	Any	T 3	T 44
T 3	1000 @ 0.5Hz (1s on, 1s off) Intermittent - P...	Any	T 2	T 44
T 4	1.4KH-1.6KHz 1s, 1.6KHz-1.4KHz 0.5s - NF C 48...	Any	T 24	T 1
T 5	544(100mS)/440 (400mS) - NF S 32-001	Any	T 19	T 1
T 6	1500/500 - (0.5s on , 0.5s off) x3 + 1s gap -...	Any	T 44	T 1
T 7	500-1500Hz Sweeping 2 sec on 1 sec off - AS4428	Any	T 44	T 1
T 8	500/1200Hz @ 0.26Hz(3.3s on, 0.5s off) - NEN ...	Any	T 24	T 35
T 9	1000 (1s on, 1s off)x7 + (7s on, 1s off) - IM...	Any	T 34	T 1
T 10	1000 (1s on, 1s off)x7 + (7s on, 1s off) - IM...	Any	T 34	T 1
T 11	420(0.5s on, 0.5s off)x3 + 1s gap - ISO 8201 ...	Any	T 1	T 8
T 12	1000(0.5s on, 0.5s off)x3 + 1s gap - ISO 8201...	Any	T 1	T 8
T 13	422/775 - (0.85 on, 0.5 off) x3 + 1s gap - ...	Any	T 1	T 8
T 14	1000/2000 @ 1Hz - Singapore	Any	T 3	T 35
T 15	300 Continuous	Any	T 24	T 35
T 16	440 Continuous	Any	T 24	T 35
T 17	470 Continuous	Any	T 24	T 35
T 18	500 Continuous - IMO code 2 (Low)	Any	T 24	T 35
T 19	554 Continuous	Any	T 24	T 35
T 20	660 Continuous	Any	T 24	T 35
T 21	800 Continuous - IMO code 2 (High)	Any	T 24	T 35
T 22	1200 Continuous	Any	T 24	T 35
T 23	2000 Continuous	Any	T 3	T 35
T 24	2400 Continuous	Any	T 20	T 35
T 25	440 @ 0.83Hz (0.60s on, 0.60s off) Intermittent	Any	T 44	T 8
T 26	470 @ 0.9Hz (0.55s on, 0.55s off) Intermittent	Any	T 44	T 8
T 27	470 @ 5Hz (0.10s on, 0.10s off) Intermittent	Any	T 44	T 8
T 28	544 @ 1.14Hz (0.43s on, 0.44s off) Intermittent	Any	T 24	T 8
T 29	655 @ 0.875Hz (0.57s on, 0.57s off) Intermittent	Any	T 44	T 8
T 30	660 @ 0.28Hz (1.80s on, 1.80s off) Intermittent	Any	T 24	T 8
T 31	660 @ 3.3Hz (0.15s on, 0.15s off) Intermittent	Any	T 24	T 8
T 32	745 @ 1Hz (0.50s on, 0.50s off) Intermittent	Any	T 24	T 8
T 33	800 (0.25s on, 1.00s off) Intermittent	Any	T 24	T 8
T 34	800 @ 2Hz (0.25s on, 0.25s off) - IMO code 3....	Any	T 24	T 8
T 35	1000 @ 1Hz (0.50s on, 0.50s off) Intermittent	Any	T 24	T 8
T 36	2400 @ 1Hz (0.50s on, 0.50s off) Intermittent	Any	T 24	T 8
T 37	2900 @ 5Hz (0.10s on, 0.10s off) Intermittent	Any	T 24	T 8
T 38	363/518 @ 1Hz (0.50s / 0.50s) Alternating	Any	T 8	T 19
T 39	450/500 @ 2Hz (0.25s / 0.25s) Alternating	Any	T 8	T 19
T 40	554/440 @ 1Hz (0.50s / 0.50s) Alternating	Any	T 24	T 19
T 41	554/440 @ 0.65Hz (0.76s / 0.76s) Alternating	Any	T 8	T 19
T 42	561/760 @ 0.83Hz (0.60s / 0.60s) Alternating	Any	T 8	T 19
T 43	780/600 @ 0.96Hz (0.52s / 0.52s) Alternating	Any	T 8	T 19
T 44	800/1000 @ 2Hz (0.25s / 0.25s) Alternating	Any	T 24	T 19
T 45	970/800 @ 2Hz (0.25s / 0.25s) Alternating	Any	T 8	T 19
T 46	800/1000 @ 0.875Hz (0.57s / 0.57s) Alternating	Any	T 24	T 19
T 47	2400/2900 @ 2Hz (0.25s / 0.25s) Alternating	Any	T 24	T 19
T 48	500/1200 @ 0.3Hz (1.67s / 1.67s) Sweeping	Any	T 24	T 12
T 49	560/1055 @ 0.18Hz (2.73s / 2.73s) Sweeping	Any	T 24	T 12
T 50	560/1055 @ 3.3Hz (0.15s / 0.15s) Sweeping	Any	T 24	T 12
T 51	600/1250 @ 0.125Hz (4s / 4s) Sweeping	Any	T 24	T 12
T 52	660/1200 @ 1Hz (0.50s / 0.50s) Sweeping	Any	T 24	T 12
T 53	800/1000 @ 1Hz (0.50s / 0.50s) Sweeping	Any	T 24	T 12
T 54	800/1000 @ 7Hz (0.07s / 0.07s) Sweeping	Any	T 24	T 12
T 55	800/1000 @ 50Hz (0.01s / 0.01s) Sweeping	Any	T 24	T 12
T 56	2400/2900 @ 7Hz (0.07s / 0.07s) Sweeping	Any	T 24	T 12
T 57	2400/2900 @ 1Hz (0.50s / 0.50s) Sweeping	Any	T 24	T 12
T 58	2400/2900 @ 50Hz (0.01s / 0.01s) Sweeping	Any	T 24	T 12
T 59	2500/3000 @ 2Hz (0.25s / 0.25s) Sweeping	Any	T 24	T 12
T 60	2500/3000 @ 7.7Hz (0.65s / 0.65s) Sweeping	Any	T 24	T 12
T 61	800Hz Motor Siren	Any	T 24	T 12
T 62	1200Hz Motor Siren	Any	T 24	T 12
T 63	2400Hz Motor Siren	Any	T 24	T 12
T 64	Simulated Bell	Any	T 21	T 12

No liability is accepted for any consequence of the use of this document. The technical specification of this unit is subject to change without notice due to our policy of continual product development. All dimensions are approximate. This unit is sold subject to our standard conditions of sale, a copy of which is available on request.