PMA Prozeß- und Maschinen-Automation GmbH

Universal controller
KS 45



KS 45

KS 45

KS 45

KS 45

rail line

Operating manual

English

9499-040-71811

valid from: 06/2009

BlueControl®

More efficiency in engineering, more overview in operating:

The projecting environment for the BluePort® controllers, indicators and *rail line* - measuring converters / universal controllers



ATTENTION!
Mini Version and Updates on
www.pma-online.de
or on PMA-CD

Explanation of symbols:

General information

General warning

Caution: ESD-sensitive components

Caution: Read the operating instructions

Read the operating instructions

Note

© 2004 • PMA Prozeß- und Maschinen-Automation GmbH • Printed in Germany
All rights reserved • No part of this document may be reproduced or published in any form
or by any means without prior written permission from the copyright owner.

A publication of
PMA Prozeß- und Maschinen Automation
P.O.Box 310229
Germany

Content

1. General 5
1.1 Application in thermal plants 6

2. Safety hints 7
2.1 MAINTENANCE, REPAIR AND MODIFICATION 8
2.2 Cleaning 8
2.3 Spare parts 8

3. Mounting 9
3.1 Connectors 10

4. Electrical connections 11
4.1 Connecting diagram 11
4.2 Terminal connections 11
4.3 Connecting diagram 13
4.4 Connection examples 14
4.5 Hints for installation 15
4.5.1 cULus approval 15

5. Operation 16
5.1 Front view 16
5.2 Operating structure 17
5.3 Behaviour after supply voltage switch-on 17
5.4 Displays in the operating level 18
5.4.1 Display line 1 18
5.4.2 Display line 2 18
5.4.3 Switch-over with the enter-key 18
5.5 Extended operating level 19
5.6 Special change-over functions 20
5.6.1 Automatic / manual switch-over 20
5.6.2 ProG - start programmer 20
5.6.3 Func - switching function 20
5.7 Selecting the units 21

6. Functions 22
6.1 Linearization 22
6.2 Input scaling 23
6.2.1 Input fail detection 24
6.2.2 Two-wire measurement 24
6.3 Filter 25
6.4 Substitue value for inputs 25
6.5 Input forcing 25
6.6 O_2 measurement (optional) 25
6.7 Limit value processing 27
6.7.1 Input value monitoring 27
6.7.2 Heating-current alarm 28
6.7.3 Loop-alarm 29
6.7.4 Monitoring the number of operating hours and switching cycles 29
6.8 Analog output (optional) 30
6.8.1 Analog output 30
6.8.2 Logic output 31
6.8.3 Transmitter power supply 31

6.8.4 Analog output forcing . . . 31
6.9 Maintenance manager / error list . . . 32
6.9.1 Error list: . . . 32
6.9.2 Error status self-tuning . . . 33
6.10 Resetting to factory setting . . . 34

7. Controlling . . . 35
7.1 Setpoint processing . . . 35
7.1.1 Setpoint gradient / ramp . . . 36
7.1.2 Setpoint limitation . . . 36
7.1.3 Second setpoint . . . 36
7.2 Configuration examples . . . 37
7.2.1 Signaller (inverse)/ On-Off controller . . . 37
7.2.2 2-point controller (inverse) . . . 38
7.2.3 3-point controller (relay & relay) . . . 39
7.2.4 3-point stepping controller (relay & relay) . . . 40
7.2.5 Continuous controller (inverse) . . . 41
7.2.6 Δ Z Y - Off controller / 2-point controller with pre-contact . . . 42
7.3 Self-tuning . . . 43
7.3.1 Preparation for self-tuning . . . 43
7.3.2 Self-tuning sequence . . . 43
7.3.3 Self-tuning start . . . 44
7.3.4 Self-tuning cancellation . . . 44
7.3.5 Acknowledgement procedures in case of unsuccessful self-tuning . . . 44
7.3.6 Examples for self-tuning attempts . . . 45
7.4 Manual tuning . . . 46

8. Programmer . . . 47

9. Timer . . . 49
9.1 Setting up the timer . . . 49
9.1.1 Operating modes . . . 49
9.1.2 Tolerance band . . . 50
9.1.3 Timer start . . . 50
9.1.4 Signal end . . . 50
9.2 Determining the timer run-time . . . 50
9.3 Starting the timer . . . 51
9.4 End / cancelation of the timer . . . 51

10. Configuration level . . . 53
10.1 Configuration survey . . . 53
10.2 Configurations . . . 54

11. Parameter-level . . . 61
11.1 Parameter-survey . . . 61
11.2 Parameters . . . 62

12. Calibrating-level . . . 64
12.1 Offset-correction . . . 65
12.2 2-point-correction . . . 66

13. Engineering Tool BlueControl® . . . 67

14. Versions . . . 68

15. Technical data . . . 69

16. Index . . . 74

1 General

Thank you very much for buying an Universal Controller KS 45.

The universal controllers KS 45 are suitable for precise, cost-efficient contol tasks in all industrial applications.
For that you can choose between simple on/off-, PID- or motorstepping control.

The process-value signal is connected via an universal input. A second analog input can be used for heating-current measurement or as external setpoint input.
The KS 45 has at least one universal input and two switching outputs. Optionally the controller can be fitted with an universal output or with optocoupler outputs. The universal output can be configured as continuous output with current or voltage, for triggering solid state relays or for transmitter supply.
Galvanic isolation is provided between inputs and outputs as well as from the supply voltage and the communication interfaces.

Applications

The KS 45 as universal controller can be utilized in many applications, e.g.:

- Furnaces
- Burners and boilers
- Dryers
- Climatic chambers
- Heat treatment
- Sterilizers
- Oxygen-control
- As a positioner

...

At-a-glance survey of advantages

Compact construction, only 22,5 mm wide
Clips onto top-hat DIN rail
Plug-in screw terminals or spring clamp connectors
Dual-line LC display with additional display elements
Process values always in view
Convenient 3-key operation
Direct communication between rail-mounted transmitters
Universal input with high signal resolution (>14 bits) reduces stock keeping
Universal output with high resolution (14 bits) as combined current / voltage output
Quick response, only 100 ms cycle time, i.e. also suitable for fast signals
2-Pt.-, 3-pt.-, motorstepping-, continuous controlling
Customer-specific linearization
Measurement value correction (offset or 2-point)
Self-optimization
Logical linking of digital outputs, e.g. for common alarms
Second analog input for ext. setpoint, heating current or as universal input

Further documentation for universal controller KS 45:

- **Data sheet KS 45** **9498 737 48513**
- **Operating note KS 45** **9499 040 71541**
- **Interface description** **9499 040 72011**

1.1 Application in thermal plants

In many thermal plants, only the use of approved control instruments is permissible.
There is a KS 45 version (KS45-1xx-xxxxx-Dxx) which meets the requirements as an electronic temperature controller (TR, type 2.B) according to DIN 3440 and EN 14597.
This version is suitable for use in heat generating plants, e.g. in

- **building heating systems acc. to DIN EN 12828 (formerly DIN 4751)**
- **large water boilers acc. to DIN EN 12953-6 (formerly DIN 4752)**
- **heat conducting plants with organic heat transfer media acc. to DIN 4754**
- **oil-fired plants to DIN 4755**

...

Temperature monitoring in water, oil and air is possible by means of suitable approved probes.

2 Safety hints

This unit was built and tested in compliance with VDE 0411-1 / EN 61010-1 and was delivered in safe condition.
The unit complies with European guideline 89/336/EWG (EMC) and is provided with CE marking.
The unit was tested before delivery and has passed the tests required by the test schedule. To maintain this condition and to ensure safe operation, the user must follow the hints and warnings given in this operating manual.



The unit is intended exclusively for use as a measurement and control instrument in technical installations.



Warning
If the unit is damaged to an extent that safe operation seems impossible, the unit must not be taken into operation.

ELECTRICAL CONNECTIONS

The electrical wiring must conform to local standards (e.g. VDE 0100). The input measurement and control leads must be kept separate from signal and power supply leads.
In the installation of the controller a switch or a circuit-breaker must be used and signified. The switch or cir - cuit-breaker must be installed near by the controller and the user must have easy access to the controller.

COMMISSIONING

Before instrument switch-on, check that the following information is taken into account:

- **Ensure that the supply voltage corresponds to the specifications on the type label.**
- **All covers required for contact protection must be fitted.**
- **If the controller is connected with other units in the same signal loop, check that the equipment in the output circuit is not affected before switch-on. If necessary, suitable protective measures must be taken.**
- **The unit may be operated only in installed condition.**
- **Before and during operation, the temperature restrictions specified for controller operation must be met.**



Warning
The ventilation slots must not be covered during operation.



The measurement inputs are designed for measurement of circuits which are not connected directly with the mains supply (CAT I). The measurement inputs are designed for transient voltage peaks up to 800V against PE.

SHUT-DOWN

For taking the unit out of operation, disconnect it from all voltage sources and protect it against accidental operation.
If the controller is connected with other equipment in the same signal loop, check that other equipment in the output circuit is not affected before switch-off. If necessary, suitable protective measures must be taken.

2.1 MAINTENANCE, REPAIR AND MODIFICATION

The units do not need particular maintenance.
There are no operable elements inside the device, so the user must not open the unit

Modification, maintenance and repair work may be done only by trained and authorized personnel. For this purpose, the PMA service should be contacted.

Warning
When opening the units, or when removing covers or components, live parts and terminals may be exposed.
Connecting points can also carry voltage.

Caution
When opening the units, components which are sensitive to electrostatic discharge (ESD) can be exposed.
The following work may be done only at workstations with suitable ESD protection.
Modification, maintenance and repair work may be done only by trained and authorized personnel. For this purpose, the PMA service should be contacted.

You can contact the PMA-Service under:

PMA Prozeß- und Maschinen-Automation GmbH
Miramstraße 87
D-34123 Kassel

Tel. +49 (0)561 / 505-1257
Fax +49 (0)561 / 505-1357
e-mail: mailbox@pma-online.de

2.2 Cleaning

The cleaning of the front of the controller should be done with a dry or a wetted (spirit, water) handkerchief.

2.3 Spare parts

As spare parts für the devices the following accessory parts are allowed:

Description	Order-No.
Connector set with screw terminals	9407-998-07101
Connector set with spring-clamp terminals	9407-998-07111
Bus connector for fitting in top-hat rail	9407-998-07121

3 Mounting

Abmessungen / dimensions

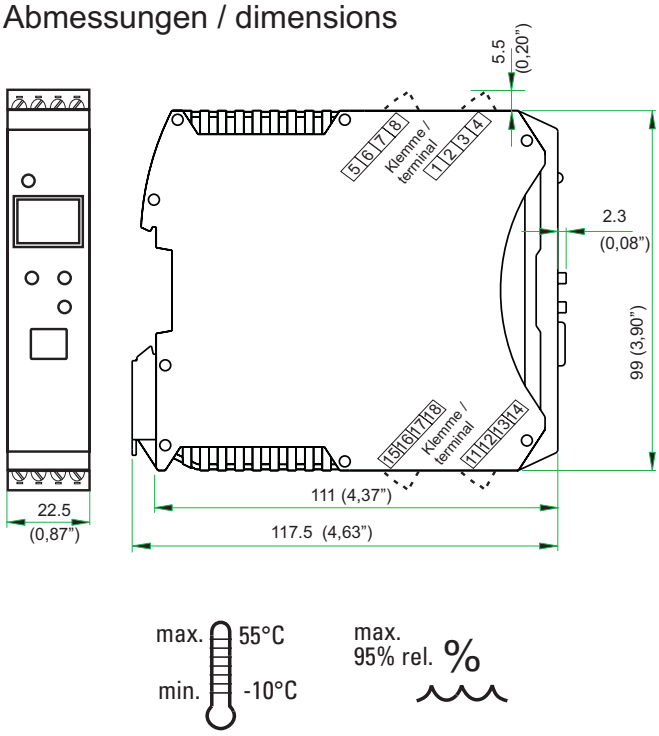

Montage / mounting

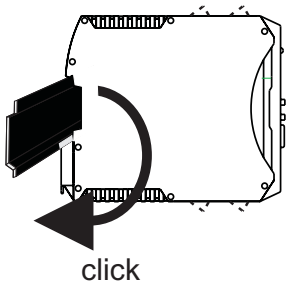

Demontage / dismantling

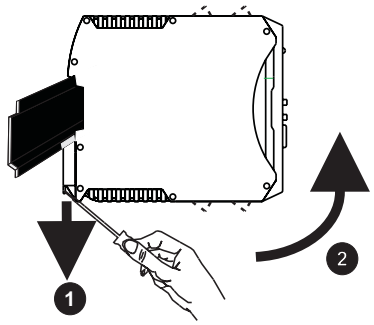

The unit is provided for vertical mounting on 35 mm top-hat rails to EN 50022.

If possible, the place of installation should be exempt of vibration, aggressive media (e.g. acid, lye), liquid, dust or aerosol.

The instruments of the *rail line* series can be mounted directly side by side. For mounting and dismounting, min. 8 cm free space above and below the units should be provided.

For mounting, simply clip the unit onto the top-hat rail from top and click it in position.
To dismount the unit, pull the bottom catch down using a screwdriver and remove the unit upwards.

Universal Controller KS 45 does not contain any maintenance parts, i.e. the unit need not be opened by the customer.

The unit may be operated only in environments for which it is suitable due to its protection type.

The housing ventilation slots must not be covered.

In plants where transient voltage peaks are susceptible to occur, the instruments must be equipped with additional protective filters or voltage limiters!

Caution! The instrument contains electrostatically sensitive components.

Please, follow the instructions given in the safety hints.

To maintain contamination degree 2 acc. to EN 61010-1, the instrument must not be installed below contactors or similar units from which conducting dust or particles might trickle down.

3.1 Connectors

The four instrument connectors are of the plug-in type. They plug into the housing from top or bottom and click in position (audible latching). Releasing the connectors should be done by means of a screwdriver.
Two connector types are available:

- **Screw terminals for max. 2,5 mm^2 conductors**
- **Spring-clamp terminals for max. 2,5 mm^2 conductors**



Before handling the connectors, the unit must be disconnected from the supply voltage.

Tighten the screw terminals with a torque of 0,5 - 0,6 Nm.

With spring-clamp terminals, stiff and flexible wires with end crimp can be introduced into the clamping hole directly. For releasing, actuate the (orange) opening lever.

Contact protection: Terminal blocks which are not connected should remain in the socket.

4 Electrical connections

4.1 Connecting diagram

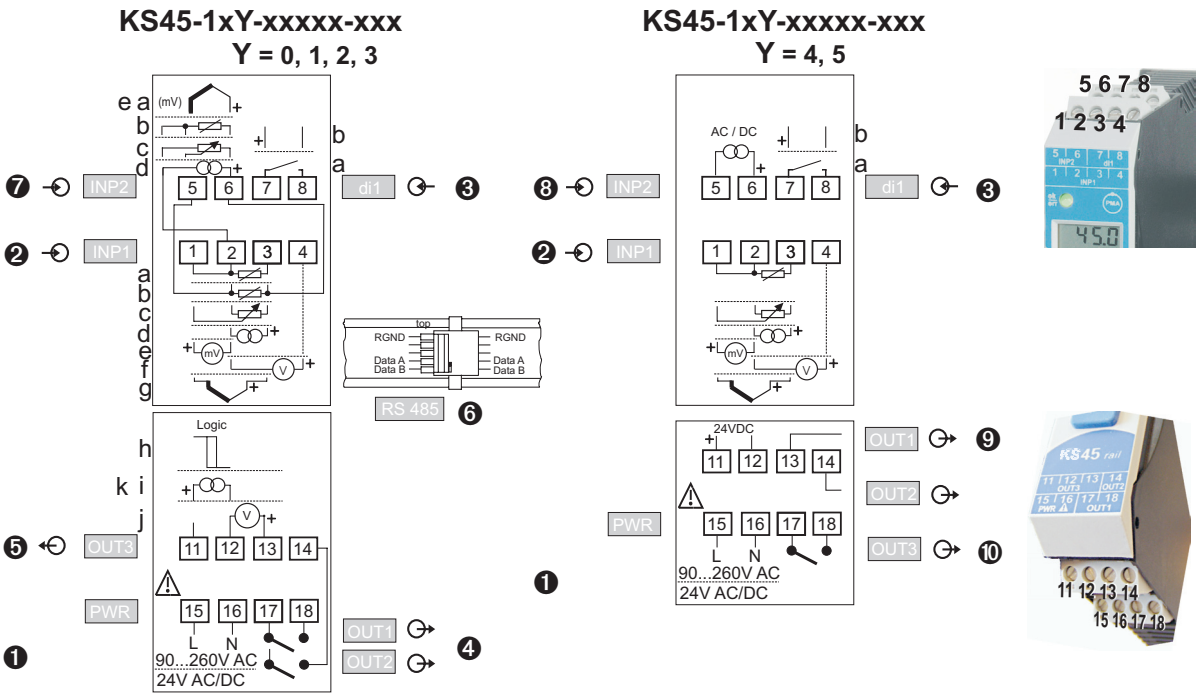

4.2 Terminal connections

Faulty connection might cause destruction of the instrument !

❶ Connecting the supply voltage

Dependent on order

- **90 … 260 V AC** **terminals: 15,16**
- **24 V AC / DC** **terminals: 15,16**

For further information, see section "Technical data"

Instruments with optional system interface:
Energization is via the bus connector of field bus coupler or power supply module. Terminals 15, 16 must not be used.

❷ Connecting input INP1

Input for the measurement value

a	resistance thermometer (Pt100/ Pt1000/ KTY/ ...), 3-wire connection	terminals: 1, 2, 3
b	resistance thermometer (Pt100/ Pt1000/ KTY/ ...), 4-wire connection	terminals: 2, 3, 5, 6
c	potentiometer	terminals: 1, 2, 3
d	current (0/4...20mA)	terminals: 2, 3
e	voltage (-2,5...115/-25...1150/-25...90/ -500...500mV)	terminals: 1, 2
f	voltage (0/2...10V/-10...10V/ -5...5V)	terminals: 2, 4
g	thermocouple	terminals: 1, 3

❸ Connecting input di1

Digital input, configurable as a switch or a push-button.

a	contact input	terminals: 7,8
b	optocoupler input (optional)	terminals: 7,8

❹ Connecting outputs OUT1 / OUT2 (optional)

Relay outputs max. 250V/2A NO contacts with a common terminal.

- **OUT1** **terminals: 17, 18**
- **OUT2** **terminals: 17, 14**

❺ Connecting output OUT3

Universal output

h	logic (0..20mA / 0..10V)	terminals: 11,12
i	current (0...20mA)	terminals: 11,12
j	voltage (0...10V)	terminals: 12,13
k	transmitter power supply	terminals: 11,12

❻ Connecting the bus interface (optional exept d)

RS 485 interface with MODBUS RTU protocol

* see interface description MODBUS RTU: (9499-040-72011)

❼ Connecting input INP2 (optional exept d)

Input for the second variable INP2.

a	thermocouple	terminals: 5,6
b	resistance thermometer (Pt100/ Pt1000/ KTY/ ...), 3-wire connection	terminals: 2,5,6
c	potentiometer	terminals: 2,5,6
d	current (0/4...20mA)	terminals: 2,6
e	voltage (-2,5...115/-25...1150/-25...90/ -500...500mV)	terminals; 5,6

❽ Connection of input INP1 for the version with optional opto-coupler outputs

Input for the measured variable (measurement value).

a	resistance thermometer (Pt100/ Pt1000/ KTY/ ...), 3-wire connection	terminals: 1, 2, 3
c	potentiometer	terminals: 1, 2, 3
d	current (0/4...20mA)	terminals: 2, 3
e	voltage (-2,5...115/-25...1150/-25...90/ -500...500mV)	terminals: 1, 2
f	voltage (0/2...10V / -10...10V / -5...5V)	terminals: 2, 4
g	thermocouple	terminals: 1, 3

❾ Connecting INP2 -HC (optional)

Input for heating current

- Current 0/4...20mA DC and 0 … 50 mA AC terminals: 5,6

❿ Connecting opto-coupler outputs OUT1 / OUT2 (optional)

Opto-coupler outputs with shared positive control voltage.

- OUT1 terminals: (11), 12, 13
- OUT2 terminals: (11), 12, 14

⓫ Connecting relay output OUT3 (optional)

Relay output max. 250V/2A as nomally open contact.

- OUT3 terminals: 17, 18

4.3 Connecting diagram

The instrument terminals used for the engineering can be displayed and printed out via BlueControl ® (menu File \ Print preview - Connection diagram).

Example:

Connecting diagram		
Connector 1		
Pin	Name	Description
1	INP1 TC-	Process value x1
2	INP2 GND	
3	INP1 TC+	
4	---	
5	---	
6	INP2 +I	Heating current input
7	di1 contact	Switch-over to SP2
8	di1 contact	

Connector 2		
Pin	Name	Description
11	OUT3	Signal limit 1, signal INP1 fail
12	OUT3	
13	---	
14	OUT2	Controller output Y2
15	PWR L 90...250V	
16	PWR N 90...250V	
17	OUT1 / OUT2	
18	OUT1	Controller output Y1

Connector 3		
Pin	Name	Description
BC1	RS485	RGND
BC2	NC	
BC3	NC	
BC4	RS485	Data A
BC5	RS485	Data B

4.4 Connection examples

Example: INP2 with current trans- former and SSR via opto-coupler

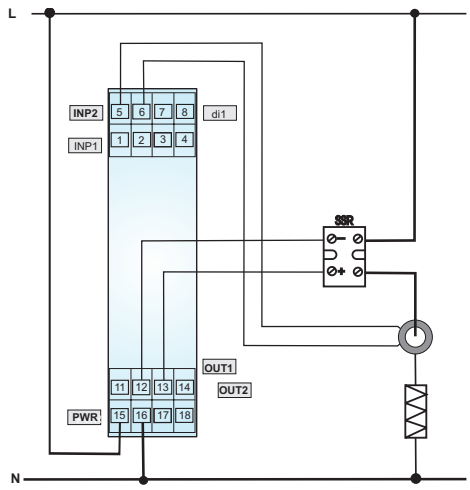

Example: heating / cooling OUT 1 /OUT2

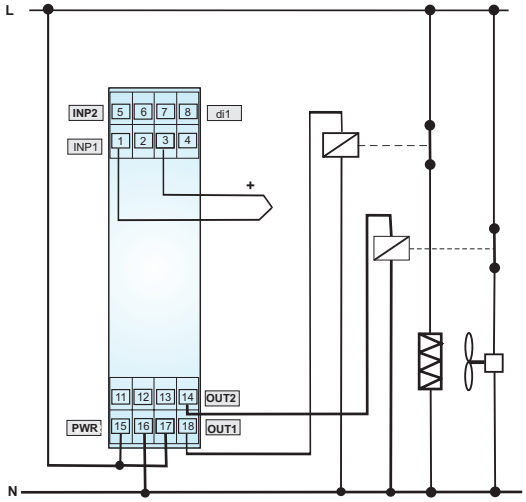

Connection example: KS 45 and TB 45

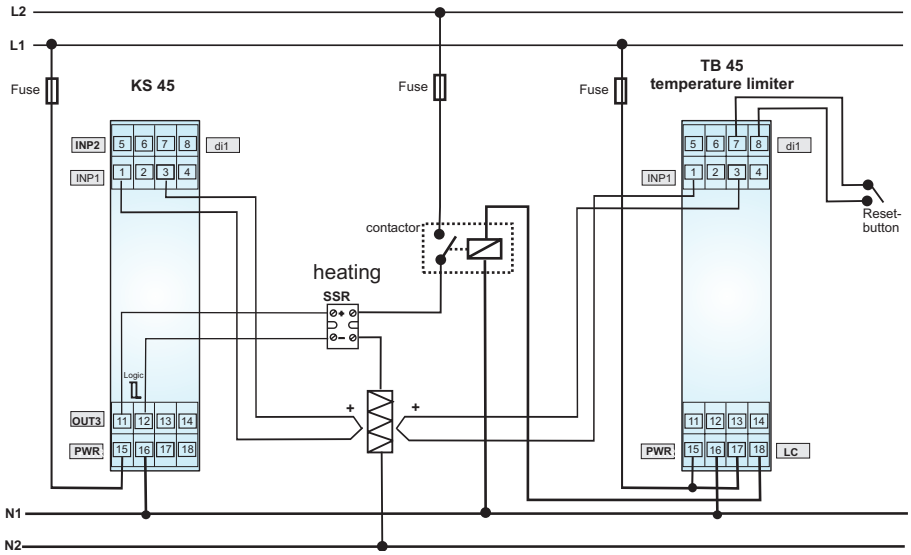

Example: RS 485 interface with RS 485-RS 232 converter
See documentation 9499-040-72011

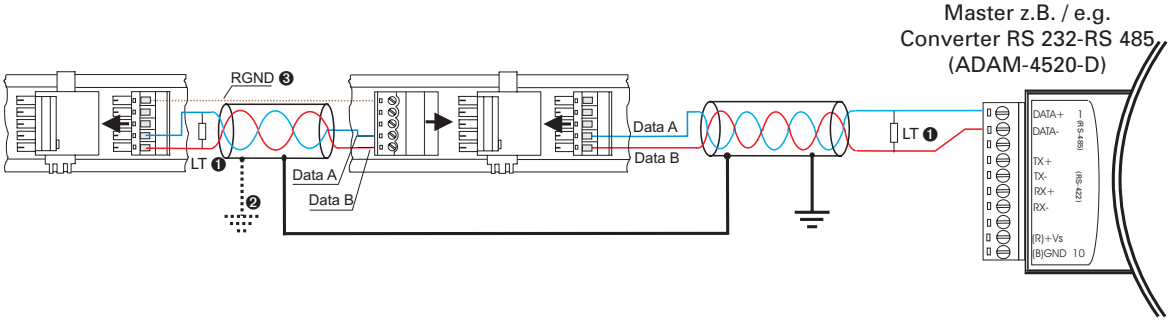

4.5 Hints for installation

- Measurement and data lines should be kept separate from control and power supply cables.
- Sensor measuring cables should be twisted and screened, with the screening connected to earth.
- External contactors, relays, motors, etc. must be fitted with RC snubber circuits to manufacturer specifications.
- The unit must not be installed near strong electric and magnetic fields.
- The temperature resistance of connecting cables should be selected in accordance with the local conditions.



The unit is not suitable for installation in explosion-hazarded areas.



Faulty connection can lead to the destruction of the instrument.



The measurement inputs are designed for measurement of circuits which are not connected directly with the mains supply (CAT I). The measurement inputs are designed for transient voltage peaks up to 800V against PE.



Please, follow the instructions given in the safety hints.

4.5.1 cULus approval

For compliance with cULus regulations, the following points must be taken into account:

- ❑ Use only copper (Cu) wires for 60 / 75 °C ambient temperature.
- ❑ The connecting terminals are designed for 0,5 – 2,5 mm^2 Cu conductors.
- ❑ The screw terminals must be tightened using a torque of 0,5 – 0,6 Nm.
- ❑ The instrument must be used exclusively for indoor applications.
- ❑ For max. ambient temperature: see technical data.
- ❑ Maximum operating voltage: see technical data.

5 Operation

5.1 Front view

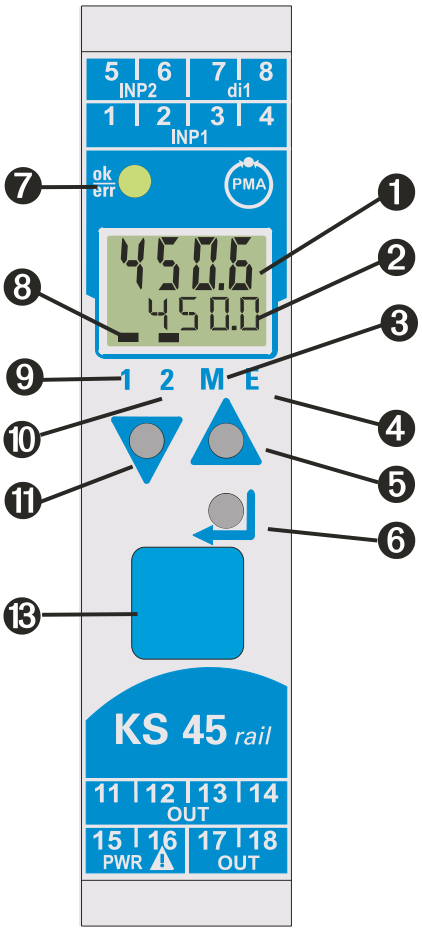

❶ Line 1: process value display

❷ Display 2: setpoint /output value/ unit-display / extended operating level / errolist / values from ConF - and PAr A-level special functions as A-M, Func, run, AdA

❸ operating mode "manual"

❹ Error list (2 x ↵), e.g.

- FbF.x sensor fault INP. X
- ShL.x short circuit INP. X
- Pol.x wrong polarity INP. X
- Lim.x limit value alarm
- ...

❺ Increment key

❻ Enter key to select extended operating level or error list

❼ Status indicator LEDs

- green: limit value 1 OK
- green blinking: no data exchange with bus coupler (only on instruments with optional system interface)
- red: limit value 1 active
- red blinking: instrument fault, configuration mistake

❽ Display elements, active as bars

❾ Status of switching output OUT1 active

❿ Status of switching output OUT2 active

⓫ Decrement key

⓭ PC connection for the **BlueControl**® engineering tool

In the first LCD-display line the measured value is shown. The second LCD-line normally shows the setpoint. When changing over to the parameter setting, configuration or calibration level and at the extended operating level, the parameter name and value are displayed alternately.

⓭ : To facilitate withdrawal of the PC connector from the instrument, please, press the cable left.

5.2 Operating structure

The instrument operation is divided into four levels:

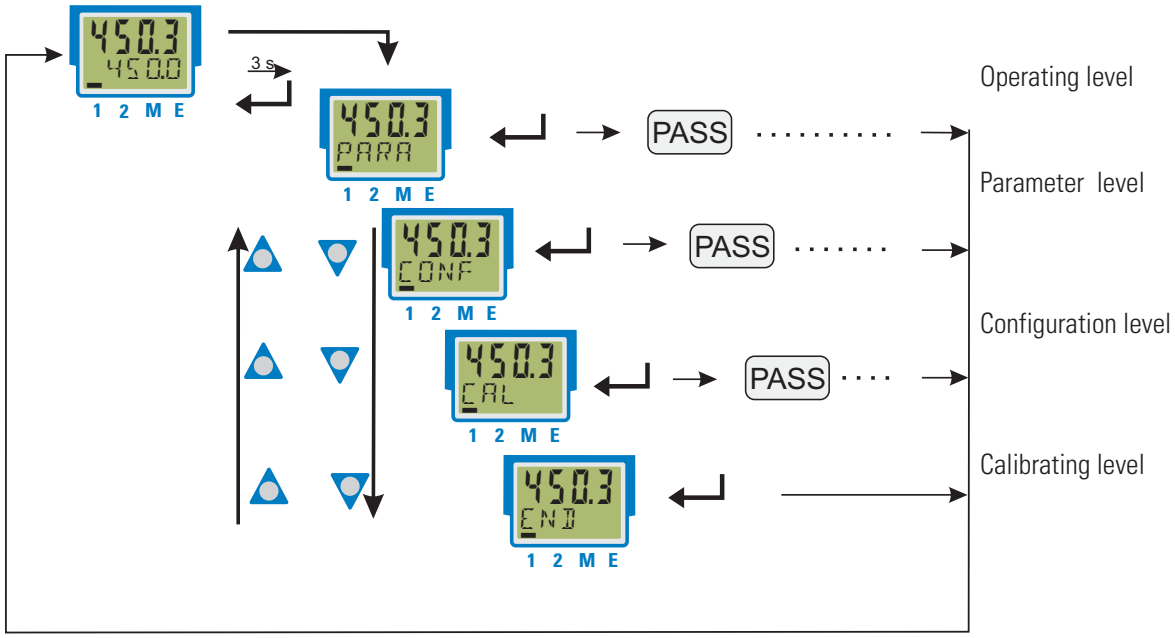

The access to the parameter, configuration and calibrating level can be disabled using the following two methods:

- Level disabling by adjustment in the engineering tool (IPar, ICnf, ICal). Display of disabled levels is suppressed.
- The access to a level can be disabled by entry of a pass number (0 … 9999). After entry of the adjusted pass number, all values of the level are available.
  With faulty input, the unit returns to the operating level.
  Adjusting the pass number is done via BlueControl®.

Individual parameters which must be accessible without pass number, or from a disabled parameter level, must be copied into the extended operating level.

Factory-setting: all levels are accessible without restrictions, pass number PASS = OFF

PASS

5.3 Behaviour after supply voltage switch-on

After switching on the supply voltage, the instrument starts with the operating level.
The operating status is as before power-off.

If the device was in manual mode, when switching off the power-supply, it also starts up in manual mode with output value Y2.

5.4 Displays in the operating level

5.4.1 Display line 1

The displayed value, also named process value, is shown in the first display line. This value is used as controlled value (variable). It results from the configuration C.L YP. (also see chp./page 7-22.)

5.4.2 Display line 2

The value to be displayed continuously in the second LCD line can be selected from different values via the **BlueControl**® engineering tool.
Normally the internal setpoint SP is set.

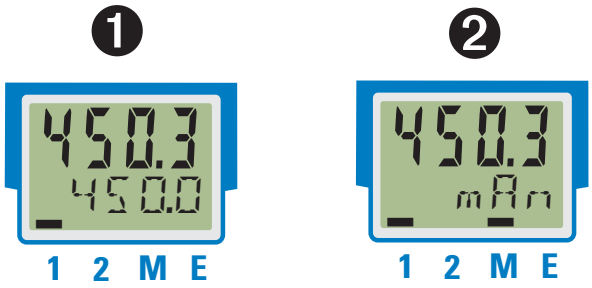

❶	Default settings as setpoint
❷	Display of operating mode automatic/manual

By deleting the individual settings for display 2, it is resetted to setpoint display. Reset to display of the engineering unit is possible by deleting the entry for line 2.

With faulty input values, signals dependent on the inputs (e.g. Inp1, Inp2, display value, Out3) also indicate FAIL.

5.4.3 Switch-over with the enter-key

By using the enter-key, different values can be called in display 2. Every time you press the enter key, the display jumps to the next feature as shown below.

❶ Displaying the defined display 2 value (via BlueControl®).
Standard setting is the internal setpoint

❷ Displaying the output value, e.g. Y 57

❸ Calling up the error list, if messages are supplied.
If there is more than one message with every push of the enter key the next message is displayed.

❹ Calling up the extended operating level, if messages are supplied.
If there is more than one message with every push of the enter key the next message is displayed.

❺ Returning to the original displayed value.
If for 30 s no key is pushed, the display automatically returns to the origin.

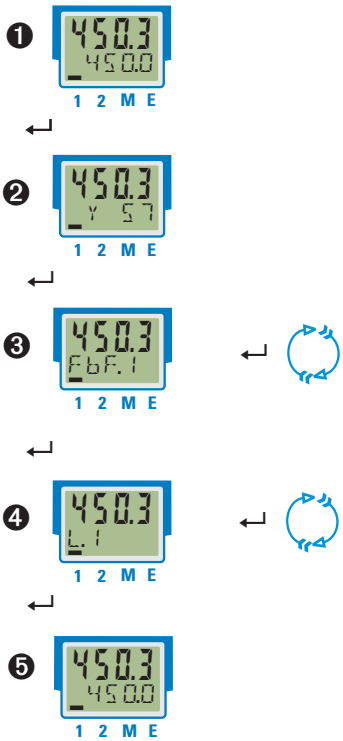

5.5 Extended operating level

The operation of important or frequently used parameters and signals can be allocated to the extended operating level.

This facilitates the access, e.g. travelling through long menu trees is omitted, or only selected values are operable, the other data of the parameter level are e.g. disabled.

Display of the max. 8 available values of the extended operating level is in the second LCD line.

The content of the extended operating level is determined by means of the **BlueControl**® engineering tool. For this, select entry "Operation level" in the "Mode" selection menu. Further information is given in the on-line help of the engineering tool.

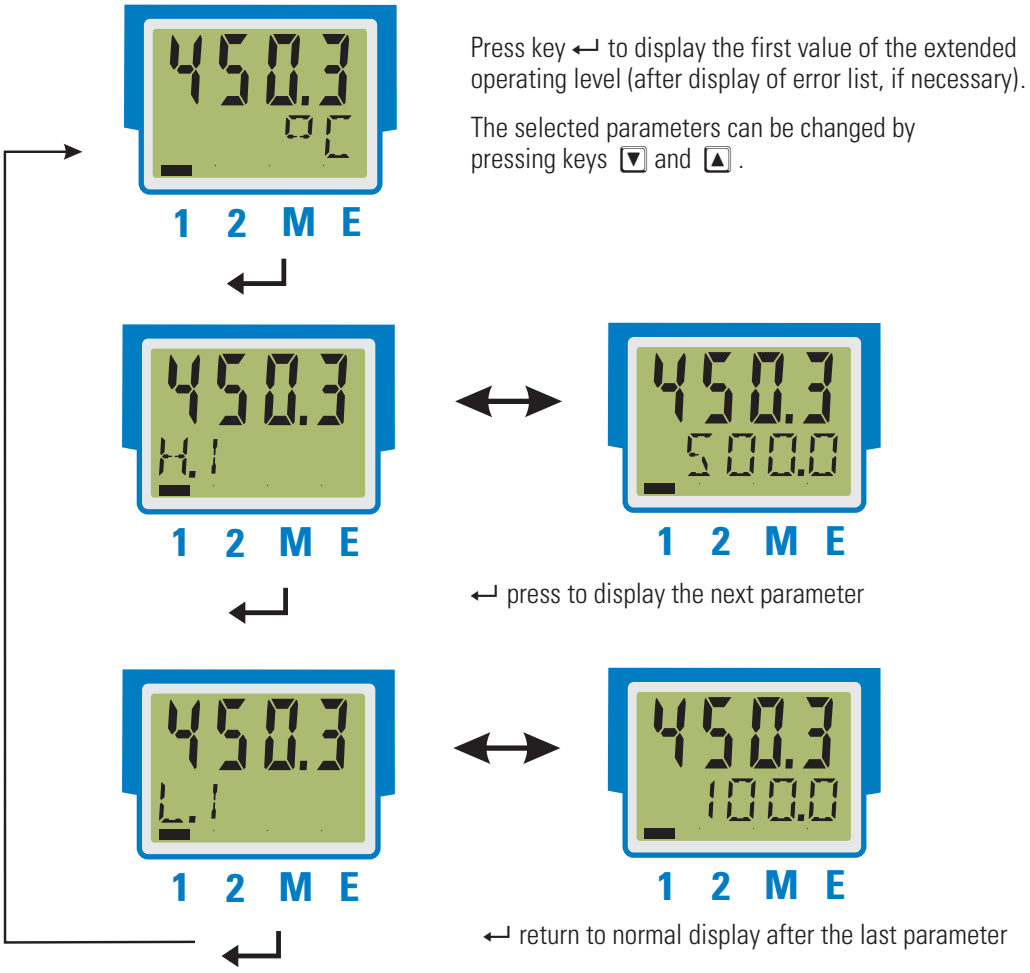

Unless a key is pressed within a defined time (timeout = 30 s), the operating level is displayed again.

5.6 Special change-over functions

In order to operate switch-over or -on functions needed more often via front, there are special functions available.

- **A-M**
  Switch-over automatic / manual-operation
- **ProG**
  starting / stopping the programmer
- **Func**
  Selection of different switching signals

Via the engineering tool **BlueControl**® the desired function can be adjusted in the operating mode (signals/logic). It can be assigned permanently to display 2 or the extended operating level.

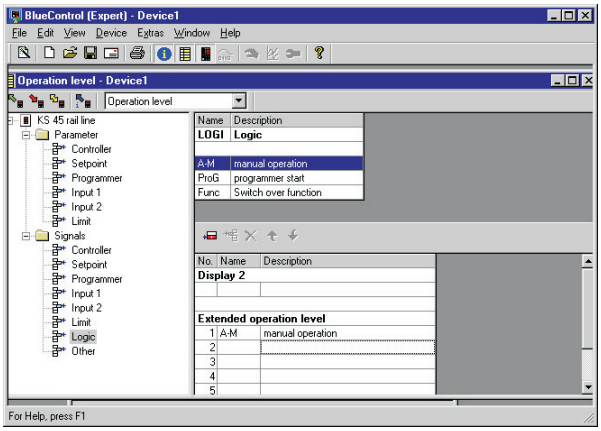

5.6.1 Automatic / manual switch-over

Between automatic and manual operation can be switched with the A-M function via front.

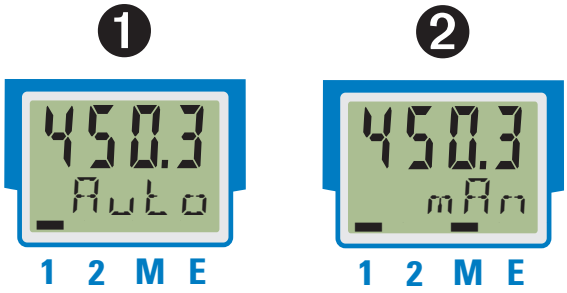

For A-M function handling, the switch-over source must be set to "Interface only" (ConF / LoGI / mAn = 0).

Manual operation ist selected via the ▲ - key. The display element M is activated.

If adjustment of the output value is allowed (ConF / Cntr / mAn = 1), the output value is displayed, otherwise display element (M) blinks.

The ▼ - key switches to automatic operation. The function can be taken into the extended operating level, or permanent in display 2.

5.6.2 ProG - start programmer

If the programmer function is activated, (ConF / Cntr / SP.Fn = 1/9), with this function the programmer can be started (run) or stopped (OFF) via front.
With the ▲ - key the programm is started and stopped with the ▼ - key.

After the end of a programm the stop function (OFF) must be selected before the programm can be started again.

5.6.3 Func - switching function

The switching function **Func** takes the tasks of a function key. One or more signals switching at the same time, can be selected via configuration (ConF / LOGI / x = 5) ausgewählt werden.

The switching function is set to on (= 1) via the ▲ - key and to OFF (= 0) via ▼ - key.

Example: The setpoint range adjustable by the user is limited from 20 to 100. Nevertheless it shall be possible to switch off the controller via front. This can be done by assigning ConF / LOGI / C.oFF = 5 and taking the Func - value into the extended operating level.

Function Func is not suitable for timer activation.

5.7 Selecting the units

The unit to be displayed is determined via configuration D.Unt.

With selection "1 = temperature unit" , the displayed unit is determined by configuration Unit with the relevant conversions for Fahrenheit and Kelvin.

By selecting D.Unt =22 , display of any max. 5-digit unit or text can be determined.

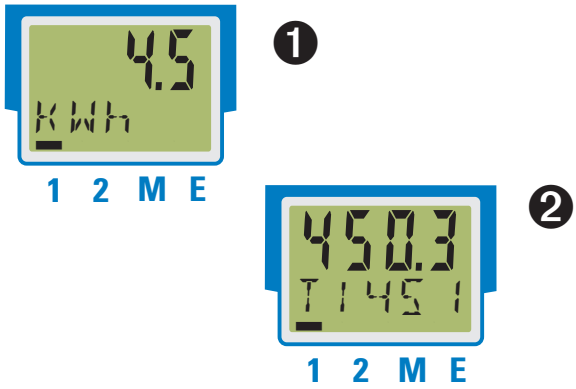

❶	Unit (example): kilowatt hour
❷	Text (example): TAG no.

For permanent display the value signals/other/D.Unt must be set in the mode "operating level" via the engineering tool.

6 Functions

The signal data flow of transmitter KS 45 is shown in the following diagram:

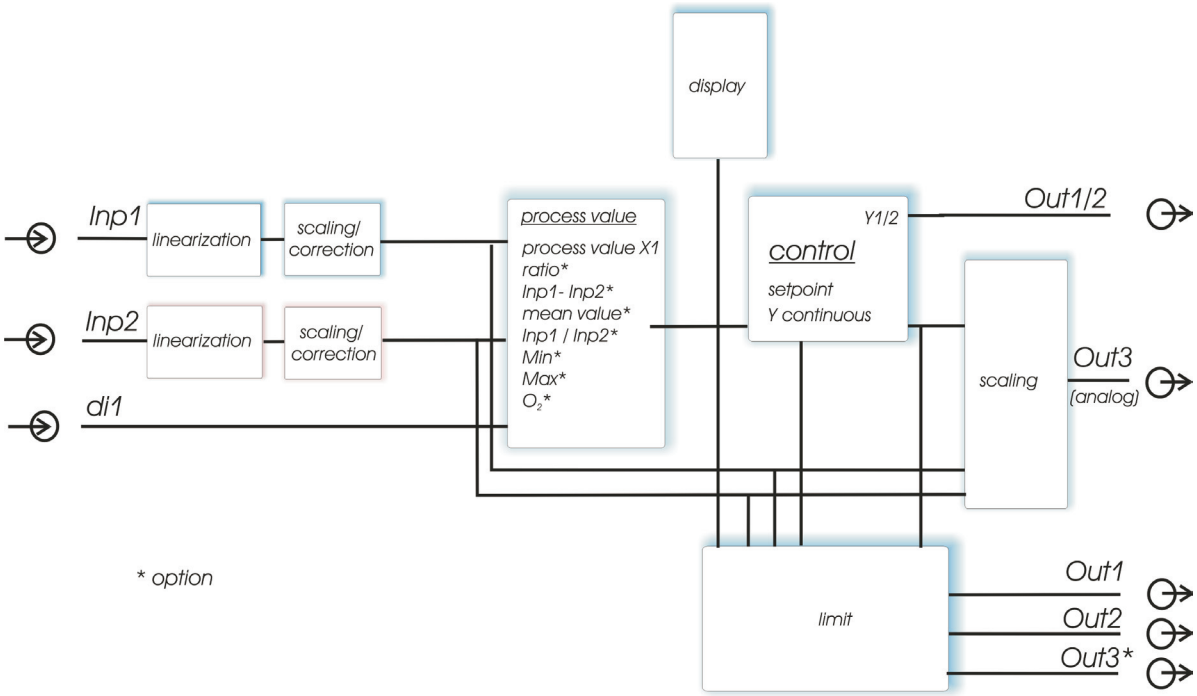

6.1 Linearization

The input values of input INP1 or INP2 can be linearized via a table.

By means of tables, e.g. special linearizations for thermocouples or other non-linear input signals, e.g. a container filling curve, are possible.

Table "L in" is always used with sensor type S.TYP= 18: "Special thermocouple" in INP1 or INP2, or if linearization S.Lin = 1: "Special linearization" are adjusted.

- The input signals must be specified in mV, V, mA, % or Ohm dependent on input type.
- For special thermocouples (S.tYP = 18), specify the input values in µV, and the output values in the temperature unit adjusted in U.LinT .
- For special resistance thermometer (KTY 11-6) (S.tYP = 23), specify the input values in Ohm, and the output values in the temperature unit adjusted in U.LinT.

Non-linear signals can be linearized using up to 16 segment points. Each segment point comprises an input (In.1 ... In.16) and an output (Ou.1 ... Ou.16). These segment points are interconnected automatically by straight lines. The straight line between the first two segment points is extended downwards and the straight line between the two highest segment points is extended upwards, i.e. a defined output value for each input value is provided.

With an In.x value switched to OFF, all further segments are switched off.

Required: Condition for the input values is an ascending order.
In.1 < In.2 <...< In.16.

For linearization of special thermocouples, the ambient temperature range should be defined exactly, becauseit is used to derive the internal temperature compensation.

See also page 60.

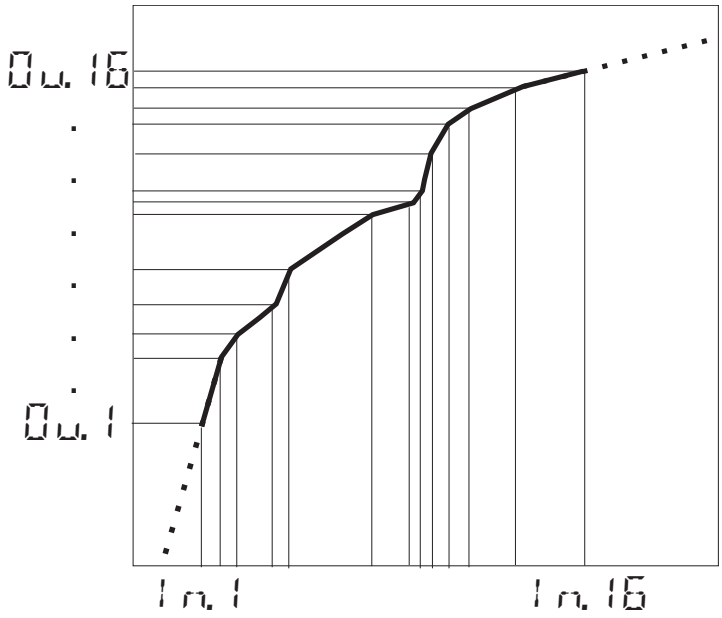

The same linearization table is used for input 1 and input 2.

6.2 Input scaling

Scaling of input values is possible. After any linearization, measurement value correction is according to the offset or two-point method.

When using current or voltage signals as input variables for InP.x, the input and display values should be scaled at the parameter level. Specification of the input value of the lower and upper scaling point is in units of the relevant physical quantity.

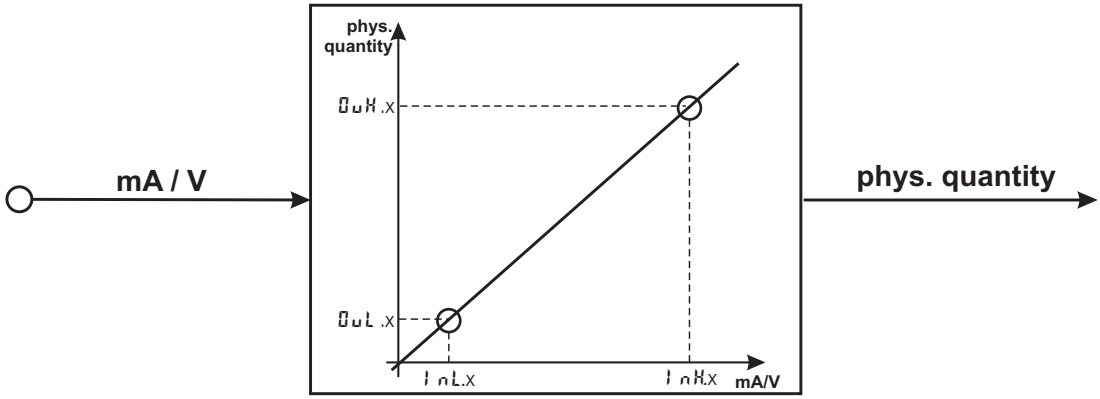

Example for mA/V

Parameters InL, OuL, InH and OuH are visible only with ConF / InP /Corr = 3 selected.

Parameters InL and InH determine the input range.

Example with mA:
InL = 4 and InH = 20 means that measuring from 4 to 20 mA is required (life zero setting).

For using the pre-defined scaling with thermocouples and resistance thermometers (Pt100), the settings for I nL and OuL as well as for I nH and OuH must correspond with each other.

For resetting the input scaling, the settings for I nL and OuL as well as I nH and OuH must correspond.

6.2.1 Input fail detection

For life zero detection of connected input signals, variable adjustment of the response value for FAIL detection is possible according to formula:

Fail response value ≤ *I nL - 0,125 * (I nH - I nL)*

Example 1: I nL = 4 mA, I nH = 20 mA
Fail response value ≤ 2 mA

Example 2: I nL = 2 V, I nH = 6 V
Fail response value ≤ 1,5 V

6.2.2 Two-wire measurement

Normally, resistance and resistance thermometer measurement is in three-wire connection, whereby the resistance of all leads is equal.
Measurement in four-wire connection is also possible for input I. With this method, the lead resistance is determined by means of reference measurement.
With two-wire measurement, the lead resistance is included directly as a falsification in the measurement result.
However, determination of the lead resistances by means of is possible.

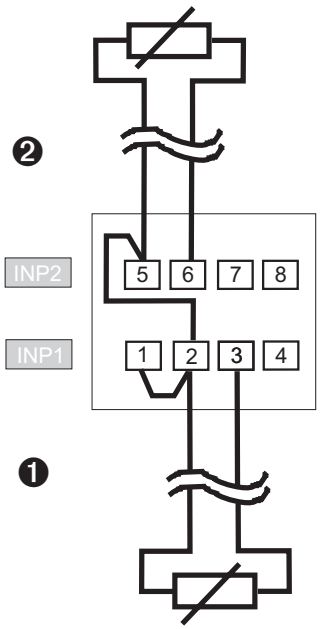

Besides the connection of the both leads of the RTD / R sensor the 3rd connector has to be short-circuited.

Procedure with Pt100, Pt1000

Connect a Pt100 simulator or a resistance decade instead of the sensor at the test point so that the lead resistance is included and calibrate the values by means of 2-point correction.

By means of measurement value correction the resulting temperature value will be corrected, but not the resistance input value. In this case the linearization error can increase.

Procedure with resistance measurement

Measure the lead resistance with an ohmmeter and subtract it from the measured value via the scaling.

6.3 Filter

Input values can be smoothened with an 1st order mathematical filter. Time constant is adjustable.

6.4 Substitue value for inputs

If a substitute value for an input is activated, this value is used for further calculation with a sensor fault, independent of the selected input function. The selected controller output reaction on sensor fault, configuration FAIL, is omitted.

With factory setting, the substitute value is switched off.

Before activation of a substitute value In.F, the effect on the control loop must be considered.

6.5 Input forcing

Setting f.AIx = 1 (only via BlueControl®) can be used for configuring the input for value entry via the interface (=forcing).

Please, check the effect on the control loop in case of failure of input value / communication and exceeded measuring range.

6.6 O_2 measurement (optional)

This function is available only on instrument versions with INP2 .

Lambda probes (λ probes) are used as input signals. The electromotive force (in volt) delivered by lambda probes is dependent on the instantaneous oxygen content and on the temperature. Therefore, the device can only display accurate measurement results, if the probe temperature is known.

The instrument calculates the oxygen content according the Nernst formula.

Distinction of heated and non-heated lambda probes is made.
Signals from both types can be handled by the device.

Heated lambda probes

Heated λ probes are fitted with a controlled heating, which ensures a continuous temperature. This temperature must be specified in parameter Probe temperature in transmitter CI 45.
Parameters → Functions → Pro be temperature tEmP → ...°C (/°F/K - dependent on configuration)

Non-heated lambda probes

When the probe is always operated at a fixed, known temperature, the procedure is as with a heated probe.
A non-heated λ probe is used, if the temperature is not constant. In this case, the temperature in addition to the probe mV value must be measured. For this purpose, any temperature measurement with analog input INP2 can be used. During function selection, input INP2 must be set for measurement (CONF / InP.2 / 1.Fnc= 1).

Configuration:
O_2 -measurement must be adjusted in function 1 :

Func → Fnc.1	7	O2-measurement with constant probe temperature (heated probe)
	8	O2-measurement with probe temperature measurement (non-heated probe)

Connection

Connect the input for the lambda probe to INP1 . Use terminals I and 2.
If necessary, temperature measurement is connected to INP2.

Input 1 is used to adjust one of the high-impedance voltage inputs as sensor type:

InP.1→ SLYP	41	special (-2,5...115 mV)
	42	special (-25...1150 mV)
	43	special (-25...90 mV)
	44	special (-500...500 mV)
	47	special (-200...200 mV)

These high-impedance inputs are without break monitoring. If necessary, input signal monitoring is possible via the limit values.

Further recommendations for adjustment:

Input 1 must be operated without linearization:

InP.1→ SLin	0	no linearization

With O2 measurement, specification if parameters related to the measured value should be output in ppm or % is required. This is done centrally during configuration.

othr → O2	0	Unit: ppm
	1	Unit: %

Whether the temperature of the non-heated λ probe is entered in °C, °F or K can be selected during configuration.

othr → Unit	1	°C
	2	°F
	3	K

Displays

With configuration for O_2 measurement (see above), the oxygen content is displayed as process value with the selected unit (see above) on line 1. Max. 4 characters can be displayed.

With display range overflow, "EEEE " is displayed .
Example: the ppm range is selected, but the value is a % value.
When exceeding the display span start, 0 is displayed.

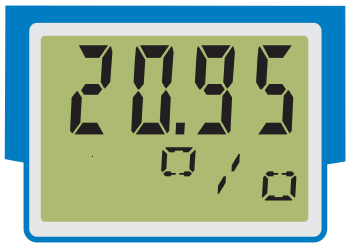

Tip: the unit can be displayed on line 2.

6.7 Limit value processing

Max. three limit values can be configured for the outputs. Generally, each one of outputs OuL.1... OuL.3 can be used for limit value or alarm signalling.

Several signals allocated to an output are linked by a logic OR function.

6.7.1 Input value monitoring

The signal to be monitored can be selected separately for each alarm in the configuration. The following signals are available:

- **Process value (display value)**
- **Control deviation (process value - setpoint)**
- **Control deviation with suppression at start up or setpoint modification**
- **Measurement value INP1**
- **Measurement value INP2 (option)**
- **setpoint**
- **Output value**

*** After switch-on or setpoint change, the alarm output is suppressed, until the process value is within the limits for the first time.**
If a time limit (Src.x = 2) was configured, the alarm is activated after elapse of time 10 x Li.1 (paramter Li.1 = integral time). Li.1 switched off (Li.1 = OFF) is considered as ∞ , i.e. the alarm activation is omitted until the process value is within the limits once.

Each of the 3 limit values Lim.1 ... Lim.3 has 2 trigger points H.x (Max) and L.x (Min), which can be switched off individually (parameter = "OFF"). The hysteresis HYS.x of each limit value is adjustable.

Input value monitoring is as shown below:

operating principle with absolute alarm

L.1 =OFF

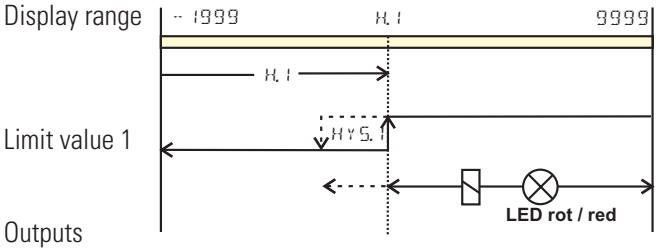

operating principle with relative alarm

L.1 =OFF

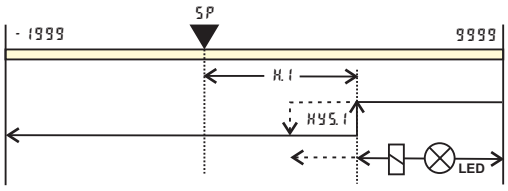

H.1 =OFF

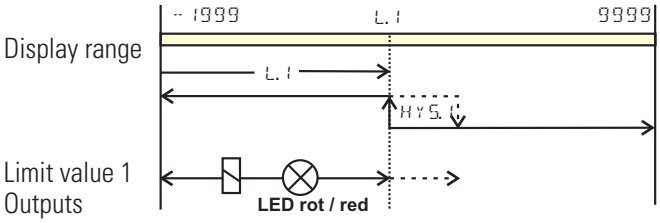

H.1 =OFF

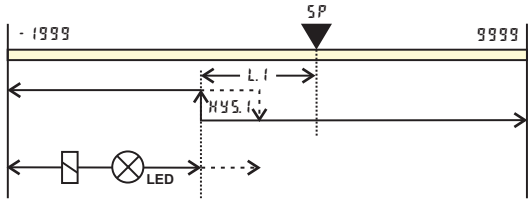

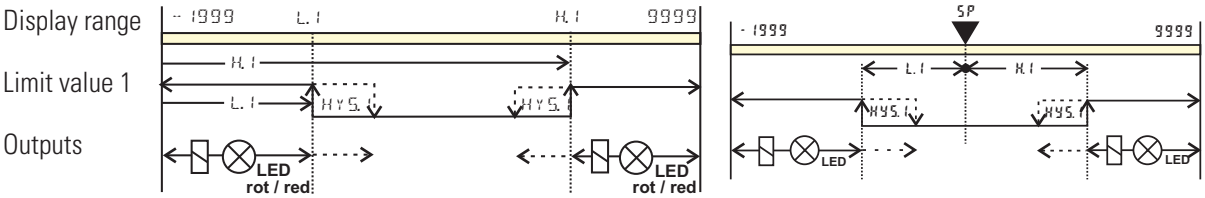

Normally open: (ConF / OuL.x / O.AcL = 0) (as shown in the example)
Normally closed: (ConF / OuL.x / O.AcL = 1) (inverted output relay action)

6.7.2 Heating-current alarm

For the measured heating current; different alarms can be activated.

- **Overlaod heating current: Heating current is larger than limit value** HC.A.
- **Interrupt heating current: Heating current is smaller than limit value** HC.A.
- **For both, short-circuit alarm is integrated.**

Short circuit monitoring

Current flow in the heating circuit although the controller output is switched off is considered as a short circuit e.g. in the solid-state relay and error message SSr (as an alarm in the error list, if configured) is output.

If the heating current is not measured as an AC current input S.tYP = "31 current 0...50mA AC", the filter time constant must be t.Fx = 0, to prevent generation of an SSR alarm due to the filter effect.

With heating current measurement via INP1, note additionally that the cycle time of connected actuators should be > 10 s due to internal hardware filters.

With SSR short circuit alarm output, the output will be within the limits again only after alarm acknowledgement.

Heating current overload

If the current flow in the heating current circuit is higher than the adjusted heating current limit value (HC.A), error message HC.A (as an alarm in the error list, if configured) is output.

Heating current interruption

If the current flow in the heating current circuit is lower than the adjusted heating current limit value (HC.A), error message HC.A (as an alarm in the error list, if configured) is output.

With heating current alarm output, the output is within the limits again immediately, when the heating current returns within the limits.

6.7.3 Loop-alarm

An alarm can be activated, monitoring the control-loop for break.
A break of the heating current loop is recognized, when at output of correcting variable Y=100%
and elapsed sequence time 2 x ti1 (reset time), no appropriate reaction of the process value results.

Loop alarm can not be used with motor-stepping- or proportional-controller and signaller.

During self-tuning, loop monitoring is omitted.

6.7.4 Monitoring the number of operating hours and switching cycles

Operating hours

The number of operating hours can be monitored. When reaching or exceeding the adjusted value, signal InF.1 is activated (in the error list and via an output, if configured).

The monitoring timer starts when setting limit value C.Std. Reset of signal InF.1 in the error list will start a new monitoring timer. Monitoring can be stopped by switching off limit value C.Std.

Adjusting the limit value for operating hours C.Std can be done only via BlueControl® .
The current counter state can be displayed in the BlueControl® expert version.

The number of operating hours is saved once per hour. Intermediate values are lost when switching off.

Number of switching cycles

The output number of switching cycles can be monitored. When reaching or exceeding the adjusted limit value, signal InF.2 is activated (in the error list and via an output, if configured).

The monitoring timer starts when setting limit value C.Sch. Reset of signal InF.2 in the error list will start a new monitoring timer. Monitoring can be stopped by switching off limit value C.Sch.

A switching cycle counter is allocated to each output. Limit value C.Sch acts on all switching cycle counters.

Adjusting the limit value for the number of switching cycles C.Sch can be done only via BlueControl®.
The current counter state can be displayed in the BlueControl® expert version.

The number of switching cycles is saved once per hour. When switching off, intermediate values are lost.

6.8 Analog output (optional)

6.8.1 Analog output

The two output signals (current and voltage) are available simultaneously. Adjust ConF / Out.3 / O.tYP to select the output type which should be calibrated.

ConF / Out.3: O.tYP	=	1	Out.3 0...20mA continuous
	=	2	Out.3 4...20mA continuous
	=	3	Out.3 0...10V continuous
	=	4	Out.3 2...10V continuous

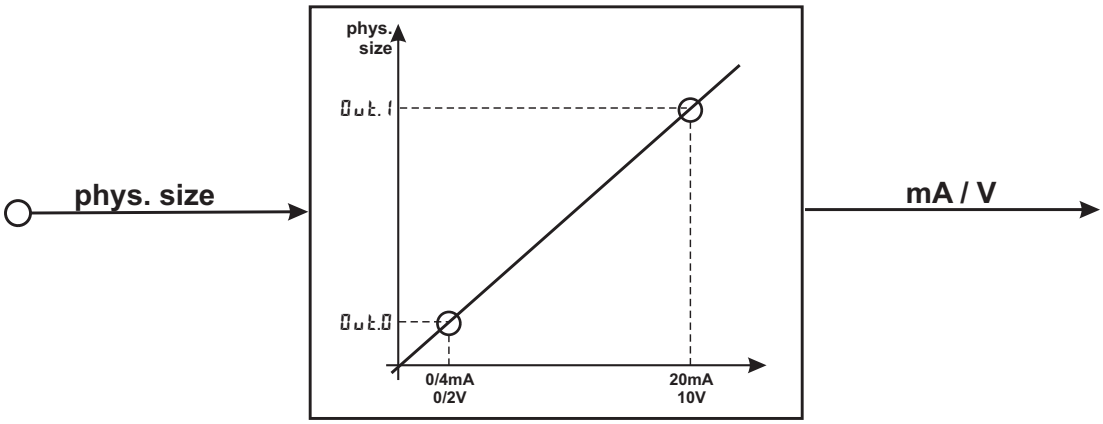

Parameter O.Src defines the signal source of the output value.

Example:

O.Src	=	3	signal source for Out.3 is the process value

Scaling of the output range is done via parameters Out.0 and Out.1. The values are specified in units of the physical quantity.

Out.0	=	-1999...9999	scaling Out.3 for 0/4mA or 0/2V
Out.1	=	-1999...9999	scaling Out.3 for 20mA or 10V

Example: output of the full input range of thermocouple type J (-100 … 1200 °C)

Out.0 = -100
Out.1 = 1200

Example: output of a limited input range, e.g. 60.5 … 63.7 °C)

Out.0 = 60.5
Out.1 = 63.7

Please, note: the smaller the span, the higher the effect of input variations and resolution.

Using current and voltage output in parallel is possible only in galvanically isolated circuits.

Configuration O.tYP = 2 (4 … 20mA) or 4 (2...10V) means only allocation of the reference value (4 mA or 2V) for scaling of output configuration Out.0. Therefore, output of smaller values is also possible rather than output limiting by reference value 4mA / 2V.

Configuration O.tYP = 0/1 (0/4...20mA) or 2/3 (0/2...10V) determines, which output should be used as a calibrated reference output.

6.8.2 Logic output

The analog output can also be used as a logic output (O.L YP = 0).
In this case, e.g. alarms or limit values can be output or the output can be used as controller output.

6.8.3 Transmitter power supply

Two-wire transmitter power supply can be selected by adjusting O.L YP = 5.
In this case, the analog output of the device is no longer available.

Connecting example:

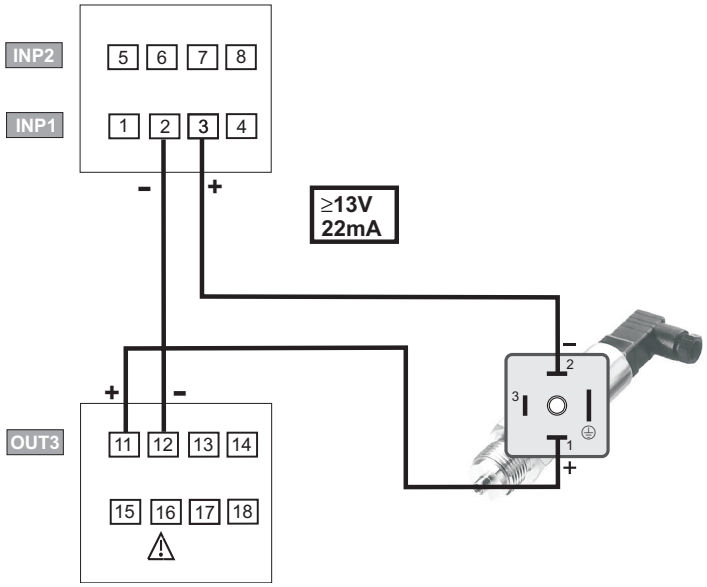

6.8.4 Analog output forcing

By adjusting f.Out = 1 (only via BlueControl®), the output can be configured for value input via interface, or by means of an input value at extended operating level (=Forcing).

This setting can be used also for e.g. testing the cables and units connected in the output circuit.

This function can also realize a setpoint potentiometer.

6.9 Maintenance manager / error list

In case of one or several errors, the error list is always displayed at the beginning of the extended operating level .

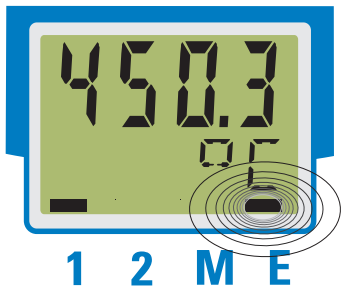

☞ A current input in the error list (alarm or error) is always indicated by display of letter E .

For display of the error list, press key ↵ once.

E- display element	Description	Possible remedial action
blinks	Alarm due to existing error	- Determine the error type in the error list via the error number - remove error
on	Error removed, Alarm not acknowledged	- acknowledge alarm in the error list by pressing the ▲ - or the ▼ -key - the alarm entry is deleted by doing so
off	no error, all alarm entrys deleted	

6.9.1 Error list:

Name	Description	Cause	Possible remedial action
E.1	Internal error, cannot be corrected	E.g. defective EEPROM	Contact PMA service Return device to manufacturer
E.2	Internal error, resettable	E.g. EMC trouble	Keep measuring and supply cables separate. Protect contactors by means of RC snubber circuits
E.3	Configuration error, resettable	Missing or faulty configuration	Check interdependencies for configurations and parameters
E.4	Hardware error	Code number and hardware not identical	Contact PMA service Replace electronics/options card
FbF.1	INP1 sensor break	Defective sensor Wiring error	Replace INP1 sensor Check INP1 connection
ShL.1	INP1 short circuit	Defective sensor Wiring error	Replace INP1 sensor Check INP1 connection
POL.1	INP1 polarity error	Wiring error	Change INP1 polarity
FbF.2	INP2 sensor break	Defective sensor wiring error	Replace INP2 sensor Check INP2 connection
ShL.2	INP2 short circuit	Defective sensor Wiring error	Replace INP2 sensor Check INP2 connection
POL.2	INP2 polarity error	Wiring error	Change INP2 polarity
HCA	Heating current alarm (HCA)	Heating current circuit interrupted, I< HC.A or I>HC.A (dependent of configuration) Heater band defective	Check heating current circuit If necessary, replace heater band
SSr	Heating current short circuit (SSR)	Current flow in heating circuit at controller off SSR defective , bonded	Check heating current circuit If necessary, replace solid-state relay
LooP	Control loop alarm (LOOP)	Input signal defective or not connected correctly Output not connected correctly	Check heating or cooling circuit Check sensor and replace it, if necessary Check controller and switching device

Name	Description	Cause	Possible remedial action
AdA.H	Self-tuning heating alarm (ADAH)	See Self-tuning heating error status	see Self-tuning heating error status
AdA.C	Self-tuning heating alarm cooling (ADAC)	See Self-tuning cooling error status	see Self-tuning cooling error status
Lim.1	Latched limit value alarm 1	Adjusted limit value 1 exceeded	Check process
Lim.2	Latched limit value alarm 2	Adjusted limit value 2 exceeded	Check process
Lim.3	Latched limit value alarm 3	Adjusted limit value 3 exceeded	Check process
ImF.1	Time limit value message	Preset number of operating hours reached	Application-specific
ImF.2	Switching cycle message (digital outputs)	Preset number of switching cycles reached	Application-specific

Latched alarms Lim1/2/3 (E-element displayed) can be acknowledged, i.e. reset via digital alarm di1.

For Configuration, see page : ConF /LOG1 /Err.r

When an alarm is still pending, i.e. unless the error cause was removed (E display blinks), latched alarms cannot be acknowledged and reset.

Error-state	Signification	
2	Pending error	Change to error status 1after error removal
1	Stored error	Change to error status 0 after acknowledgement in error list 0
0	no error/message	Not visible, except during acknowledgement

If sensor errors should not be on the error list any more after error correction without manual reset in the error list, suppression via BlueControl® is possible by means of setting ILat.

CONF / othr / ILat	1	blocked

This setting is without effect on limit values Lim.1 … 3 configured for storage.

6.9.2 Error status self-tuning

Self-tuning heating (AdA.H) and cooling (AdA.C) error status:

Error-Status	Beschreibung	Verhalten
0	kein Fehler	
3	falsche Wirkungsrichtung	Regler umkonfigurieren (invers ↔ direkt)
4	keine Reaktion der Regelgröße	eventuell Regelkreis nicht geschlossen: Fühler, Anschlüsse und Prozeß überprüfen
5	tiefliegender Wendepunkt	obere Stellgrößenbeschränkung Y.Hi vergrößern (ADAH) bzw. untere Stellgrößenbeschränkung Y.Lo verkleinern (ADAC)
6	Sollwertüberschreitungsgefahr (Parameter ermittelt)	eventuell Sollwert vergrößern (invers), verkleinern (direkt)
7	Stellgrößensprung zu klein (Δy > 5%)	obere Stellgrößenbeschränkung Y.Hi vergrößern (ADAH) bzw. untere Stellgrößenbeschränkung Y.Lo verkleinern (ADAC)
8	Sollwertreserve zu klein	Sollwert vergrößern (invers), verkleinern (direkt) oder Sollwerteinstellbereich verkleinern (→ PAr A/SELP/SPLO und SPHi)

6.10 Resetting to factory setting

In case of faulty configuration, the device can be reset to the default manufacturers condition.

❶ For this, the operator must keep the keys increment and decrement pressed during power-on.

❷ Then, press key increment to select YES.

❸ Confirm factory resetting with Enter and the copy procedure is started (display COPY).

❹ Afterwards the device restarts. In all other cases, no reset will occur (timeout abortion).

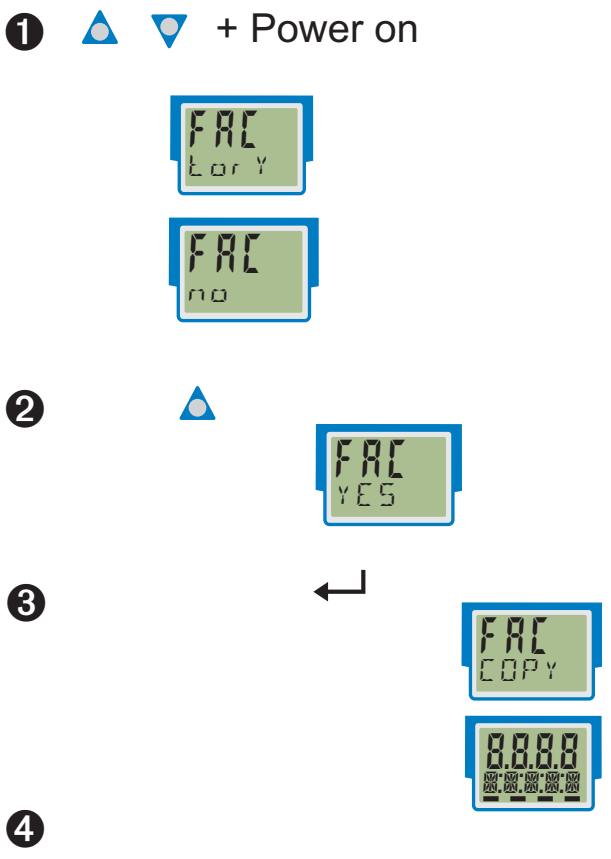

If one of the operating levels was blocked in BlueControl®, reset to factory setting is not possible.

If a pass number was defined (via BlueControl®), but no operating level was blocked, enter the correct pass number when prompted in ❸. A wrong pass number aborts the reset action.

The copy procedure (COPY) can take some seconds.Now, the transmitter is in normal operation.

Afterwards the device restarts as usual.

7 Controlling

7.1 Setpoint processing

The setpoint effective for control can come from different sources. The setpoint processing structure is shown in the following picture:

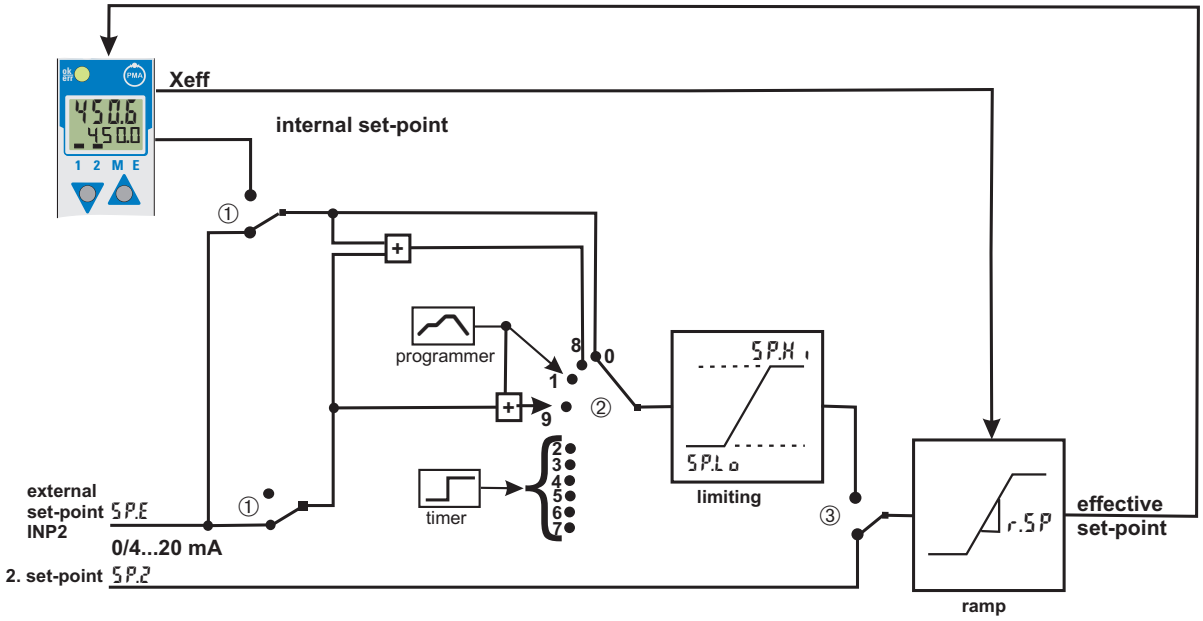

* Explanations:

① Switching internal/ external setpoint
② Configuration SP.Fn
③ Switching SP / SP.2

The ramp starts at the process value with the following switches:

- Switching internal/ external setpoint
- Switching SP / SP.2
- Switching automatic/manual
- at power on

Setpoint/ ext. setpoint
With a Setpoint/ ext. setpoint you can switch between internal setpoint SP and external setpoint SP.E. The signal for switching is determined in the configuration LOGI/SP.E.

Setpoint with external offset
With a setpoint with external offset control, the internal setpoint SP determines the actual default setpoint. It can be influenced by the external (additive) offset.

Programmer
With controlling via programmer the setpoint is determined by the internal programmer.

Programmer with external offset
With controlling via programmer with external offset the setpoint is determined by the internal programmer. The programmer value can be influenced by the external (additive) offset.

Timer
The effective setpoint is determined by the timer depending on the chosen timermode (see chapter timer).

7.1.1 Setpoint gradient / ramp

To prevent setpoint step changes, parameter → setpoint ramp → r.SP can be adjusted. This gradient is effective in positive and negative direction.
With parameter r.SP set to OFF (default), the gradient is switched off and setpoint changes are realized directly.

7.1.2 Setpoint limitation

The setpoint can be limited to a high and low value (SP.LO, SP.HI). Exceeding these limits the limit value is activated.

Those adjustments are not valid for the second setpoint SP.2.

7.1.3 Second setpoint

It can always be switched to the second setpoint. The switching source is defined with LOGI/SP.2. With this function a "safety setpoint" can be realised.

7.2 Configuration examples

7.2.1 Signaller (inverse)/ On-Off controller

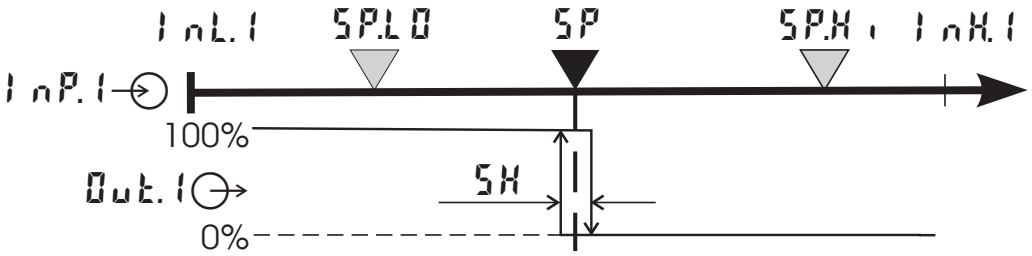

ConF / Cntr:	SP.Fn	=	0	setpoint controller
	C.Fnc	=	0	signaller with one output
	C.Act	=	0	inverse action (e.g. heating applications)
ConF / Out.1:	O.Act	=	0	action Out.1 direct
	Y.1	=	1	control output Y1 active
PArA / Cntr:	SH	=	0...9999	switching difference (symmetrical to the trigger point)
PArA / SEtP:	SP.LO	=	-1999...9999	setpoint limit low for SPeff
	SP.Hi	=	-1999...9999	setpoint limit high for SPeff

For direct signaller action, the controller action must be changed (ConF / Cntr / C.Act = 1)

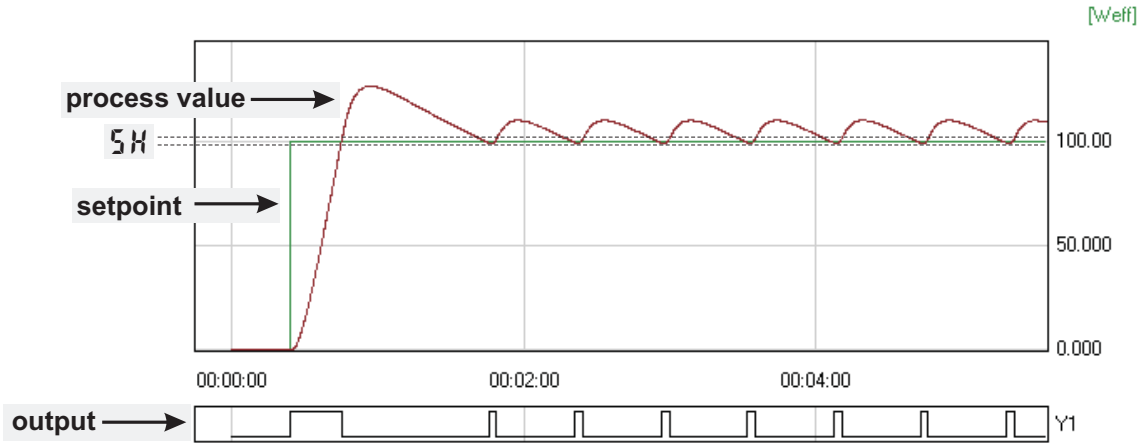

7.2.2 2-point controller (inverse)

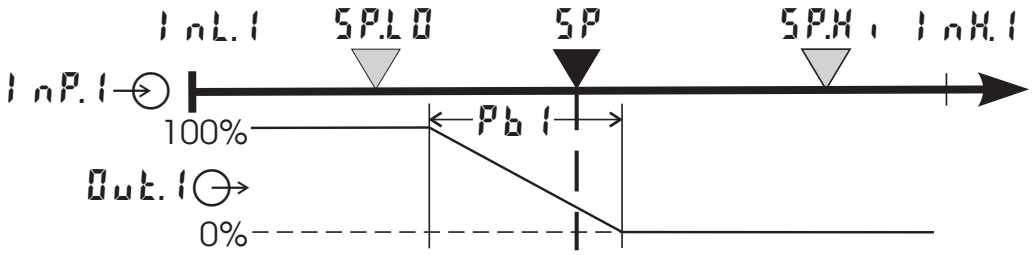

ConF / Cntr:	SP.Fn	:	0	setpoint controller
	C.Fnc	=	1	2-point controller (PID)
	C.Act	=	0	inverse action (e.g. heating applications)
ConF / Out.1:	O.Act	=	0	action Out.1 direct
	Y.1	=	1	control output Y1 active
PArA / Cntr:	Pb1	=	0,1...9999	proportional band 1 (heating) in units of phys. quantity (e.g. °C)
	t.i1	=	1...9999	integral time 1 (heating) in sec.
	td1	=	1...9999	derivative time 1 (heating) in sec.
	t1	=	0,4...9999	min. cycle time 1 (heating)
PArA / SEtP:	SP.LO	=	-1999...9999	setpoint limit low for SPeff
	SP.H1	=	-1999...9999	setpoint limit high for SPeff

For direct action, the controller action must be changed (ConF / Cntr / C.Act = 1).

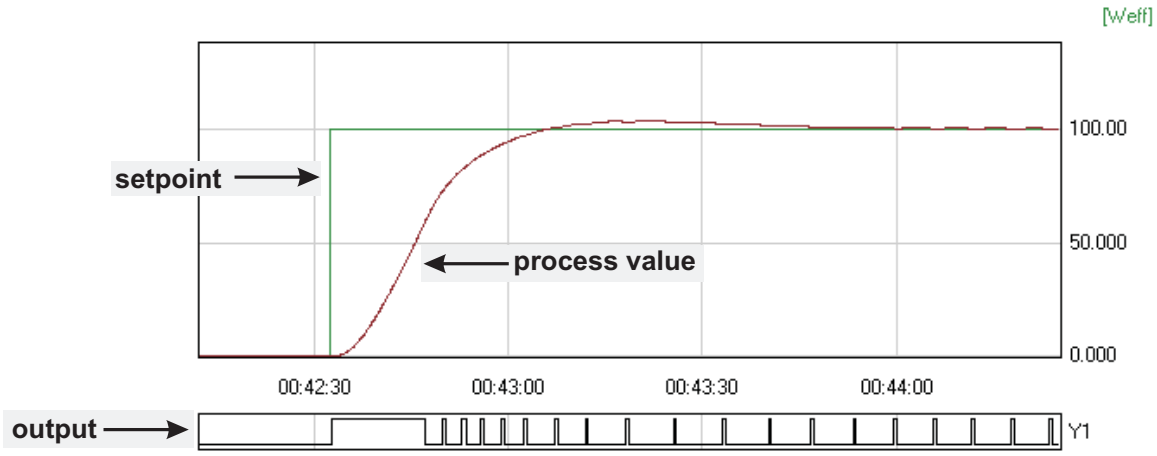

7.2.3 3-point controller (relay & relay)

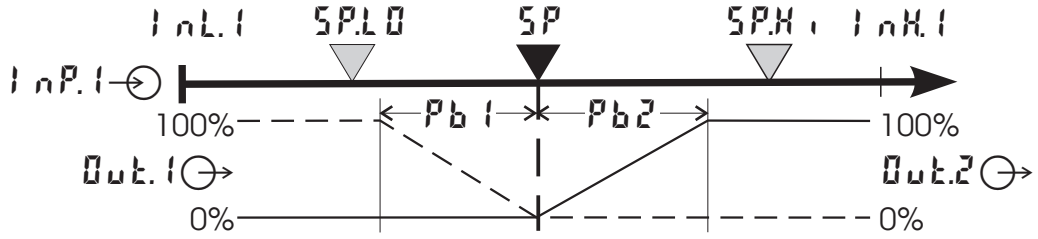

ConF / Cntr:	SP.Fn	=	0	setpoint controller
	C.Fnc	=	3	3-point controller (2xPID)
	C.Act	=	0	action inverse (e.g. heating applications)
ConF / Out.1:	O.Act	=	0	action Out.1 direct
	Y.1	=	1	control output Y1 active
	Y.2	=	0	control output Y2 not active
ConF / Out.2:	O.Act	=	0	action Out.2 direct
	Y.1	=	0	control output Y1 not active
	Y.2	=	1	control output Y2 active
PArA / Cntr:	Pb1	=	0,1...9999	proportional band 1 (heating) in units of phys. quantity (e.g. °C)
	Pb2	=	0,1...9999	proportional band 2 (cooling) in units of phys. quantity (e.g. °C)
	t.i1	=	1...9999	integral time 1 (heating) in sec.
	t.i2	=	1...9999	derivative time 2 (cooling) in sec.
	td1	=	1...9999	integral time 1 (heating) in sec.
	td2	=	1...9999	derivative time 2 (cooling) in sec.
	t1	=	0,4...9999	min. cycle time 1 (heating)
	t2	=	0,4...9999	min. cycle time 2 (cooling)
	SH	=	0...9999	neutr. zone in units of phys.quantity
PArA / SEtP:	SP.LO	=	-1999...9999	setpoint limit low for SPeff
	SP.HI	=	-1999...9999	setpoint limit high for SPeff

7.2.4 3-point stepping controller (relay & relay)

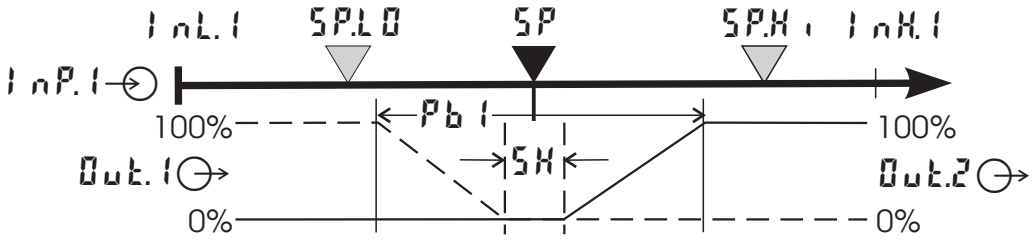

ConF / Entr:	SP.Fn	=	0	setpoint controller
	C.Fnc	=	4	3-point stepping controller
	C.Act	=	0	inverse action (e.g. heating applications)
ConF / Out.1:	O.Act	=	0	action Out.1 direct
	Y.1	=	1	control output Y1 active
	Y.2	=	0	control output Y2 not active
ConF / Out.2:	O.Act	=	0	action Out.2 direct
	Y.1	=	0	control output Y1 not active
	Y.2	=	1	control output Y2 active
PArA / Entr:	Pb1	=	0,1...9999	proportional band 1 (heating) in units of phys. quantity (e.g. °C)
	tn1	=	1...9999	integral time 1 (heating) in sec.
	td1	=	1...9999	derivative time 1 (heating) in sec.
	t1	=	0,4...9999	min. cycle time 1 (heating)
	SH	=	0...9999	neutral zone in units of phy. quantity
	tP	=	0,1...9999	min. pulse length in sec.
	tt	=	3...9999	actuator travel time in sec.
PArA / SEtP:	SP.LO	=	-1999...9999	setpoint limit low for SPeff
	SP.HI	=	-1999...9999	setpoint limit high for SPeff

For direct action of the 3-point stepping controller, the controller output action must be changed (ConF / Entr / C.Act = 1).

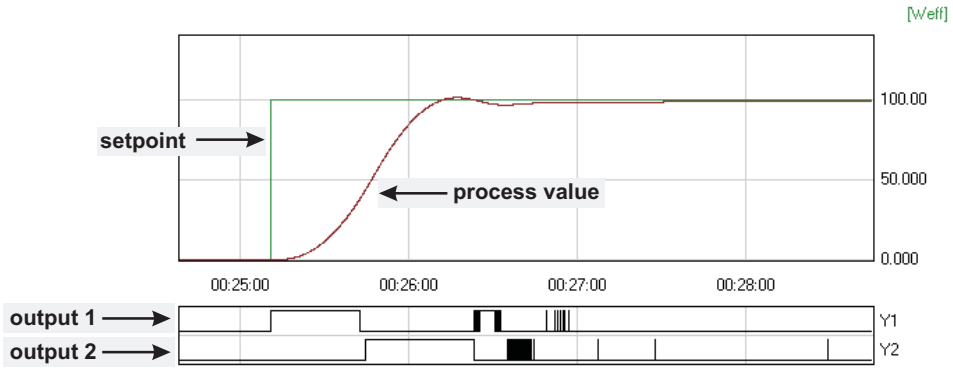

7.2.5 Continuous controller (inverse)

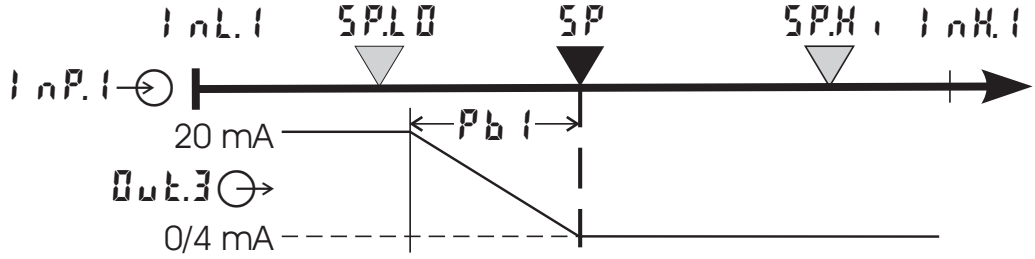

ConF / Cntr:	SP.Fn	=	0	setpoint controller
	C.Fnc	=	1	continuous controller (PID)
	C.Act	=	0	inverse action (e.g. heating applications)
ConF / Out.3:	O.tYP	=	1 / 2	Out.3 type (0/4 … 20mA)
	Out.0	=	-1999...9999	scaling analog output 0/4mA
	Out.1	=	-1999...9999	scaling analog output 20mA
PArA / Cntr:	Pb1	=	0,1...9999	proportional band 1 (heating) in units of phys. quantity (e.g. °C)
	t.1	=	1...9999	integral time 1 (heating) in sec.
	td1	=	1...9999	derivative time 1 (heating) in sec.
	t1	=	0,4...9999	min. cycle time 1 (heating)
PArA / SEtP:	SP.LO	=	-1999...9999	setpoint limit low for SPeff
	SP.H.	=	-1999...9999	setpoint limit high for SPeff

For direct action of the continuous controller, the controller action must be changed (ConF / Cntr / C.Act = 1).

To prevent control outputs Out.1 and Out.2 of the continuous controller from switching simultaneously, the control function of outputs Out.1 and Out.2 must be switched off (ConF / Out.1 and Out.2 / Y.1 and Y.2 = 0).

7.2.6 ΔZ Y - Off controller / 2-point controller with pre-contact

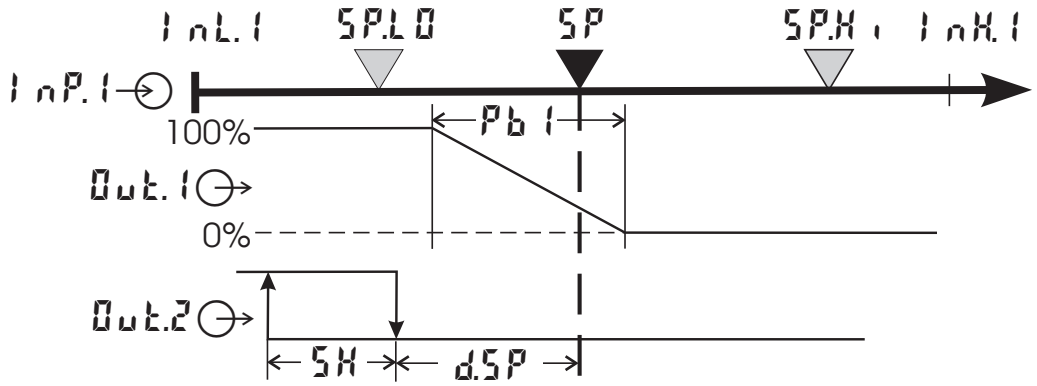

ConF / Cntr:	SP.Fn	=	0	setpoint controller
	C.Fnc	=	2	Δ -Y-Off controller
	C.Act	=	0	inverse action (e.g. heating applications)
ConF / Out.1:	O.Act	=	0	action Out.1 direct
	Y.1	=	1	control output Y1 active
	Y.2	=	0	control output Y2 not active
ConF / Out.2:	O.Act	=	0	action Out.2 direct
	Y.1	=	0	control output Y1 not active
	Y.2	=	1	control output Y2 active
PArA / Cntr:	Pb1	=	0,1...9999	proportional band 1 (heating) in units of phys. quantity (e.g. °C)
	t.i1	=	1...9999	integral time 1 (heating) in sec.
	td1	=	1...9999	derivative time 1 (heating) in sec.
	t1	=	0,4...9999	min. cycle time 1 (heating)
	SH	=	0...9999	switching difference
	d.SP	=	-1999...9999	trigg. point separation suppl. cont. Δ / Y / Off in units of phys. quantity
PArA / SEtP:	SP.LO	=	-1999...9999	setpoint limit low for SPeff
	SP.Hi	=	-1999...9999	setpoint limit high for SPeff

7.3 Self-tuning

For determination of optimum process parameters, self-tuning is possible.
After starting by the operator, the controller makes an adaptation attempt, whereby the process characteristics are used to calculate the parameters for fast line-out to the setpoint without overshoot.

The following parameters are optimized when self-tuning:

Pb1 - Proportional band 1 (heating) in engineering units [e.g. °C]
t.1 - Integral time 1 (heating) in [s] → only, unless set to OFF
td1 - Derivative time 1 (heating) in [s] → only, unless set to OFF
t1 - Minimum cycle time 1 (heating) in [s] → only, unless Adt0 was set to "no self-tuning" during configuration by means of BlueControl®.

Pb2 - Proportional band 2 (cooling) in engineering units [e.g. °C]
t.2 - Integral time 2 (cooling) in [s] → only, unless set to OFF
td2 - Derivative time 2 (cooling) in [s] → only, unless set to OFF
t2 - Minimum cycle time 2 (cooling) in [s] → only, unless Adt0 was set to "no self-tuning" during configuration by means of BlueControl®

7.3.1 Preparation for self-tuning

- **Adjust the controller measuring range as control range limits. Set values rnG.L and rnG.H to the limits of subsequent control. (Configuration→Controller→lower and upper control range limits)** ConF →CntR → rnG.L **and** rnG.H
- **Determine which parameter set shall be optimized (see tables above).**

7.3.2 Self-tuning sequence

The controller outputs 0% correcting variable or Y.Lo and waits, until the process is at rest (see start-conditions below).
Subsequently, a correcting variable step change to 100% is output.
The controller attempts to calculate the optimum control parameters from the process response. If this is done successfully, the optimized parameters are taken over and used for line-out to the setpoint.

With a *3-point controller,* this is followed by *"cooling"*.
After completing the 1st step as described, a correcting variable of -100% (100% cooling energy) is output from the setpoint.
After successfull determination of the "cooling parameters", line-out to the setpoint is using the optimized parameters.

Start condition:

- Rest condition
  For process evaluation, a stable condition is required. Therefore, the controller waits until the process has reached a stable condition after self-tuning start. The rest condition is considered being reached, when the process value oscillation is smaller than ± 0,5% of (rnG.H - rnG.L).
- **setpoint reserve**
  After having come to rest with 0% correcting variable or with Y.Lo, the controller requires a sufficient setpoint reserve for its self-tuning attempt, in order to avoid overshoot.
- **Sufficient setpoint reserve:**
  inverse controller:(with process value <setpoint-(10% of SP.H1 - SP.L0)
  direct controller: (with process value >setpoint+ (10% of SP.H1 - SP.L0)

7.3.3 Self-tuning start

Self-tuning start can be locked via BlueControl® (engineering tool) (IAda).

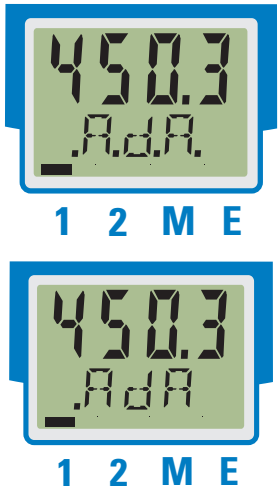

The operator can start self-tuning at any time. For this, keys ↵ and ▲ must be pressed simultaneously.

The controller outputs 0% or Y2 = 0 , and the text .AdA. is indicated in the second display line. The controller waits until the process is at rest. As soon as a sufficient setpoint reserve is present, he starts with the real self-optimization by jumping to a setpoint of 100% .
The second display line shows .AdA

After successful self-tuning, the AdA-display is off and the controller continues operating with the new control parameters.

7.3.4 Self-tuning cancellation

By the operator:
Self-tuning can always be cancelled by the operator. For this, press ↵and ▲ key simultaneously. With manual-automatic switch-over configured via A-M function, self-tuning can also be canceled by actuating. The controller continues operating with the old parameters in automatic mode in the first case and in manual mode in the second case.

By the controller:
If the Err LED starts blinking whilst self-tuning is running, successful self-tuning is prevented due to the control conditions. In this case, self-tuning was cancelled by the controller.
Dependent of control type, the output status is:

- **3-pnt. stepping controller: actuator is closed (0% output)**
- **2-pnt./ 3-pnt./ continuous controller:**
  If self-tuning was started from the automatic mode, the controller output is 0%. With self-tuning started from manual mode, the controller output is Y2.

7.3.5 Acknowledgement procedures in case of unsuccessful self-tuning

1.Press keys ↵ *and* ▲ simultaneously:
- The controller continues controlling using the old parameters in automatic mode.
- The Err LED continues blinking, until the self-tuning error was acknowledged in the error list.

2.Press A-M function (if configured):
- The controller goes to manual mode. The Err LED continues blinking, until the self-tuning error was acknowleged in the error list.

3.Press key ↵:
- Display of error list at extended operating level. After acknowledgement of the error message, the controller continues control in automatic mode using the old parameters.

Cancellation causes:
→ page 33: "Error status self-tuning heating (AIAH) and cooling (AIAC)"

7.3.6 Examples for self-tuning attempts

(controller inverse, heating or heating/cooling)

Start: heating power switched on
Heating power Y is switched off (❶). When the change of process value X was constant during one minute (❷), the power is switched on (❸).
At the reversal point, the self-tuning attempt is finished and the new parameter are used for controlling to setpoint SP.

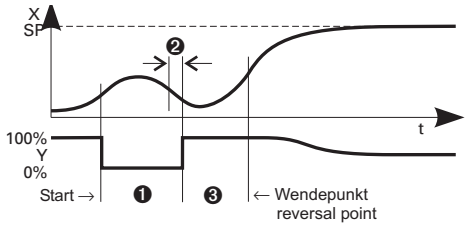

Start: heating power switched off
The controoler waits until the process value has a constant change of more than one minute. This possibly takes place already at start up (❶). Heating power Y is switched on (❷). At the reversal point, the self-tuning attempt is finished and control to the setpoint is using the new parameters.

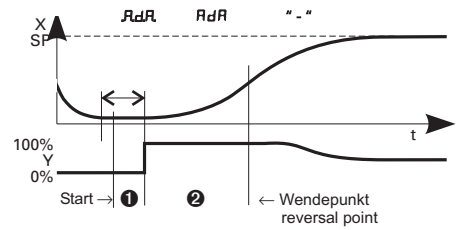

Start: at setpoint
Heating power Y is switched off (❶). If the change of process value X was constant during one minute and the control deviation is > 10% of SP.H i - SP.L O (❷), the power is switched on (❸). At the reversal point, the self-tuning attempt is finished, and control to setpoint SP is using the new parameters.

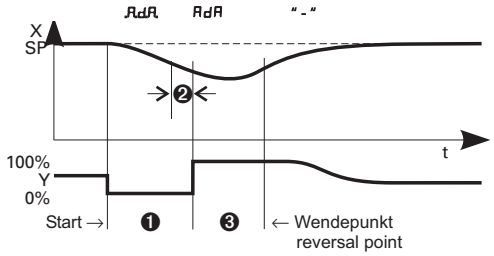

Three-point controller
The parameters for heating and cooling are determined in one attempt. The heating power is switched on (❶). At reversal point 1, heating parameters Pb 1, t i 1, td 1 and t 1 are determined. The process value is lined out to the setpoint (❷). The cooling power is switched on (❸). At reversal point 2, parameters Pb2, t i2, td2 and t2 are determined and the self-tuning attempt is finished. Control to setpoint SP is using the new parameters.

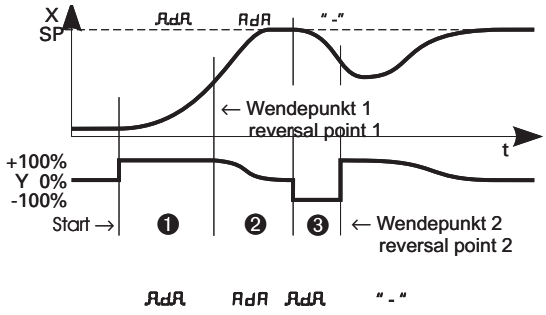

7.4 Manual tuning

The optimization aid should be used with units on which the control parameters shall be set without self-tuning.
For this, the response of process variable x after a step change of correcting variable y can be used . Frequently, plotting the complete response curve (0 to 100%) is not possible, because the process must be kept within defined limits. Values T_g and x_{max} (step change from 0 to 100 %) or Δt and Δx (partial step response) can be used to determine the maximum rate of increase v_{max}.

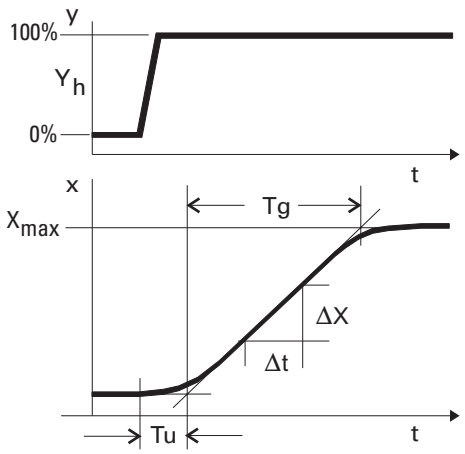

y = correcting variable
Y_h = control range
Tu = delay time (s)
Tg = recovery time (s)
X_{max} = maximum process value

$$V_{max} = \frac{Xmax}{Tg} = \frac{\Delta x}{\Delta t}$$

max. rate of increase of process value

The control parameters can be determined from the values calculated for delay time T_u , maximum rate of increase v_{max}, and characteristic K according to the formulas given below. Increase Pb1, if line-out to the setpoint oscillates.

Parameter adjustment effects

Parameter		Control	Line-out of disturbances	Start-up behaviour
Pb1	higher	increased damping	slower line-out	slower reduction of duty cycle
	lower	reduced damping	faster line-out	faster reduction of duty cycle
Ld1	higher	reduced damping	faster response to disturbances	faster reduction of duty cycle
	lower	increased damping	slower response to disturbances	slower reduction of duty cycle
t1	higher	increased damping	slower line-out	slower reduction of duty cycle
	lower	reduced damping	faster line-out	faster reduction of duty cycle

Formulas

K = Vmax • Tu

With 2-point and 3-point controllers, the cycle time must be adjusted to
t1 /t2 ≤ 0,25 * Tu

controller behavior	Pb1 [phy.units]	Ld1 [s]	t1 [s]
PID	1,7 • K	2 • Tu	2 • Tu
PD	0,5 • K	Tu	OFF
PI	2,6 • K	OFF	6 • Tu
P	K	OFF	OFF
3-point-stepping	1,7 • K	Tu	2 • Tu

8 Programmer

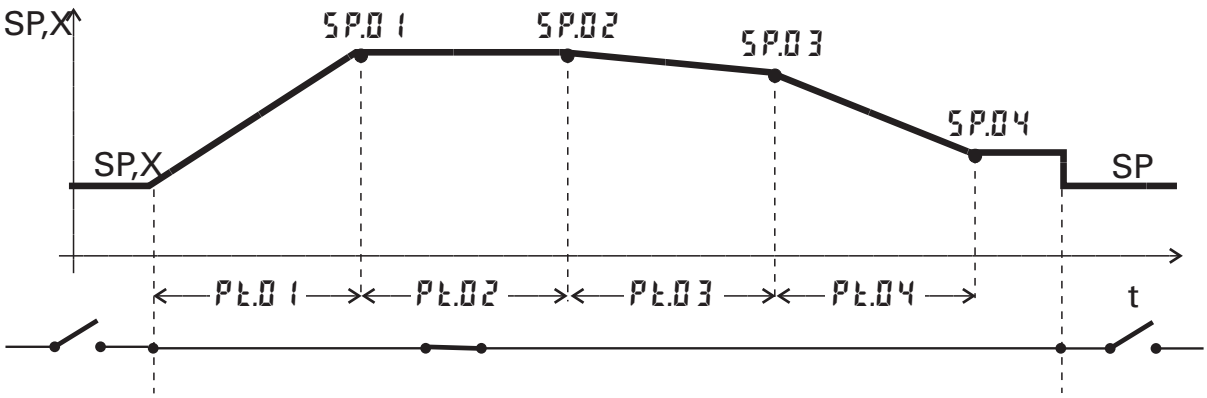

Programmer set-up:
For using the controller as a programmer, select parameter SP.Fn = 1 in the ConF menu (→ page 53). The programmer is started via digital inputs di1or the operating function *Func*.
By selecting the appropriate parameter P.run = 2 / 5, ConF -menu (→ page 55), is defined which input is used for starting the programmer.
If the end of the program shall appear as digital signal at one of the relay outputs, the appropriate parameter P.End = 1 must be selected for this output (OUT.1...OUT.3, ConF -menu → page 58, 59).

Programmer parameter setting:
A programmer with 4 segments is available to the user. Determine a segment duration Pt.01 .. Pt.04 (in minutes) and a segment target set-point SP.01 .. SP.04 for each segment in the PArA menu. (→ page 62).

Starting/stopping the programmer:
There are different possibilities for starting the programmer according to configuration:

- **Starting the programmer with a digital signal at the selected input di1.**
- **If the *Func*-function is set as permanent display2 (selectable via BlueControl®), the program can be started (run)with the ▲-key and stopped with ▼ (OFF).**
  If the *Func*-function was placed at the extended operating level, this element is selected with the ↵-key. The function works as described above.
- **If the *ProG*-function is placed in display2 (selectable via BlueControl®), the program can be started with the ▲-key (run), and stopped with the ▼-key (OFF). The ProG-function can also be placed in the extended operating level.**

The ProG-function can also be used for displaying the programmerstatus.

If the ProG-function was selected, configuration P.run = 0 should be adjusted to avoid double operation.

The programmer calculates the setpoint gradient which shall reach the segment end setpoint out of segment end setpoint and segment time. This gradient is always effective. As the programmer starts the first segment at the real process value, the actual running time of the first segment can change (process value ≠ setpoint).

Starting conditions you'll find in the following drawing.

❶ Process value = setpoint:
Programmer starts at the setpoint with the defined segment time

❷ Process value between setpoint and segmentend value SP.01 shortened segment duration.

❸ Process value bigger/smaller than SP.01; segment time 1 is skipped.

❹ Process value bigger/smaller as the setpoint: Program starts at segment start1.

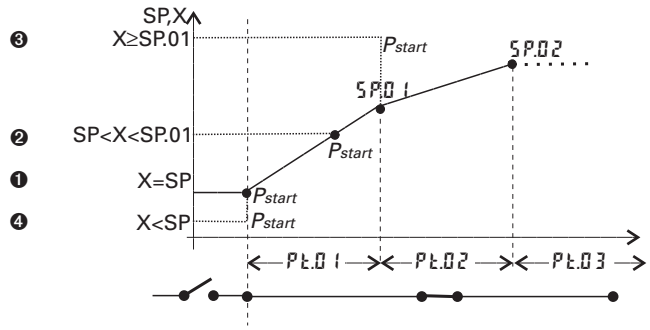

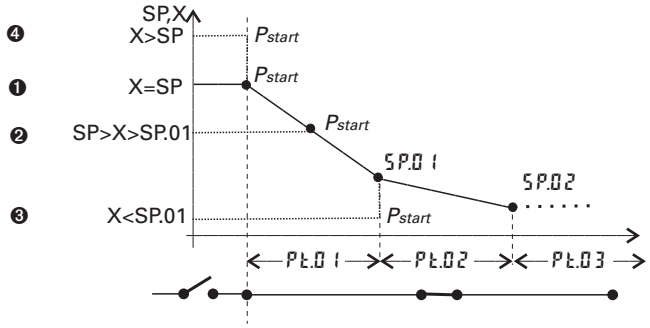

After the program has elapsed the controller works with the latest tracking setpoint. The display shows the value End.

If the program is stopped whilst running (e.g. resetting the digital signal to di1), the programmer returns to the start point an waits for a new start signal. The device goes to it's latest setpoint.

Program parameter changing while the program is running is possible.

Changing the segment time:
Changing the segment time leads to re-calculation of the required gradient. When the segment time has already elapsed, the new segment starts directly, whereby the set-point changes stepwise.

Changing the segment end setpoint:
Changing the set-point leads to re-calculation of the required gradient, in order to reach the new set-point during the segment rest time, whereby the polarity sign of the required gradient can change.

9 Timer

9.1 Setting up the timer

9.1.1 Operating modes

6 different timer modes are available to the user. The relevant timer mode can be set via parameter SP.Fn in the ConF menu (→ page 53).

Mode 1 (—)

After timer start, control is to the adjusted set-point . The timer (t.SP) runs as soon as the process value enters or leaves the band around the set-point (x = SP ±b.t 1). After timer elapse, the controller returns to Y2 . End and the output value are displayed alternately in the display line2.

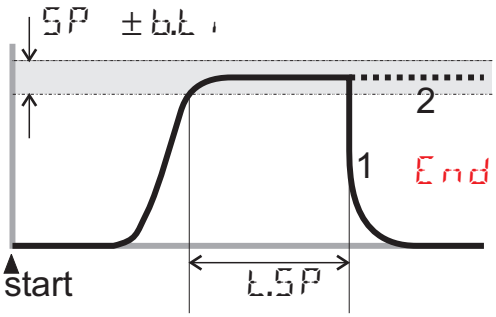

If Y2 = 0 is set, a switch off function of the outputs can be realised

Mode 2 (□□□□)

Mode 2 corresponds to mode1, except that control is continued with the relevant setpoint after timer (t.SP) elapse.

Mode 3 (—)

After timer start, control is to the adjusted set-point. The timer (t.SP) starts immediately after switch-over. After timer elapsing the controller switches to Y2 and display 2 shows End alternately with the output value.

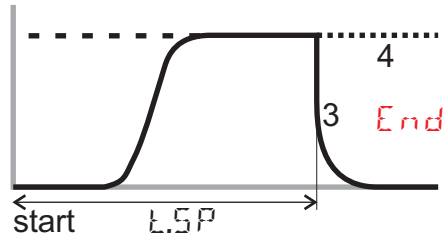

Mode 4 (□□□□)

Mode 4 corresponds to mode 3, except that control is continued with the relevant set-point after timer (t.SP)elapse.

Mode 5 (delay)

The timer starts immediately. The controller output remains on Y2 . After timer (t.SP) elapse, control starts with the adjusted set-point.

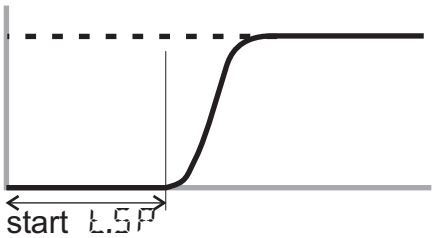

Mode 6

After set-point switch-over (SP → SP.2), control is to SP.2 . The timer (t.SP) starts when the process value enters the adjusted band around the set-point (x = SP.2 ±b.t 1). After time elapse the controller returns to SP. End and the set-point are displayed alternately in the lower display line.

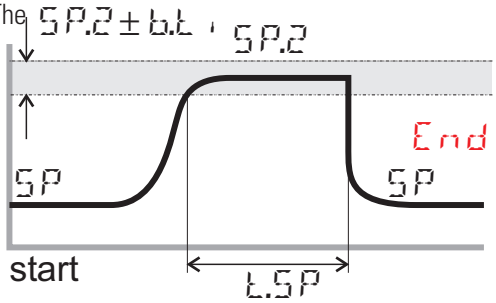

9.1.2 Tolerance band

Timer modes 1,2 and 6 are provided with a freely adjustable tolerance band. The tolerance band around the set-point can be adjusted via parameter b.t i in the ConF menu (x = SP.2 ± b.t i)
(→ page 53)

9.1.3 Timer start

Various procedures for starting the timer are possible:

Start via	LOGI		Mode					
	Y2 =	SP.2 =	1	2	3	4	5	6
Y2 → Y switching via digital input di1 ❶	2	x	✔	✔	✔	✔	✔	-
SP → SP.2 switching via digital input di1 ❶	x	2	-	-	-	-	-	✔
Power On	0	x	✔	✔	✔	✔	✔	-
	x	0	-	-	-	-	-	✔
Changing t.t i >0 (extended operating level)	x	x	✔	✔	✔	✔	✔	✔
Serial interface (if provided)	x	x	✔	✔	✔	✔	✔	✔
Operation via BlueControl® (online operation)	x	x	✔	✔	✔	✔	✔	✔

❶ when using a digital input, adjust parameter di.Fn = 2 (ConF / LOGI) (key function)

x no effect

\- not applicable

When using the digital input as a switch (di.Fn = 0 / 1) or when using the *Func* switch-over function, the timer is re-started automatically after elapsing. Switch-over, e.g. opening, will cancel the timer function.

Using the Func function as a switch for starting the timer is not recommendable, because the timer would be re-started immediately after elapsing.

9.1.4 Signal end

If one of the relays shall switch after timer elapse, parameter t inE = 1 and inverse action O.Act = 1 must be selected for the relevant output OUt.1 … OUt.3 in the ConF menu (→ page 57, 58). If direct action is selected, the relevant output signals the active timer.

9.2 Determining the timer run-time

The timer run-time can be determined via parameter t.SP in the PArA menu. The timer run-time must be specified in minutes with one digit behind the decimal point (0,1 minutes = 6 seconds).
Alternatively, the timer run-time can be determined directly at extended operating level (→ chapter 9.3).

9.3 Starting the timer

Dependent of configuration, the timer start is as follows:

- **at controller switch-on (power-on)**
- **by adjusting the timer t.t i > 0 (at extended operating level)**
- **by a positive edge at digital input di1 with configured SP → SP.2 or Y2 → Y switch-over.**
- **via the serial interface.**

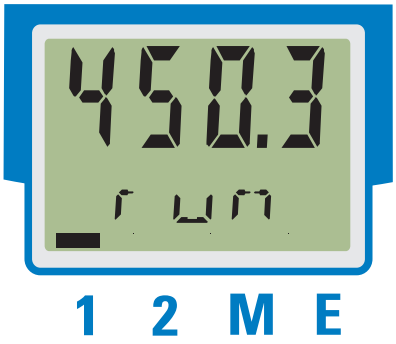

Display: the timer run is indicated by texts on LCD line 2, which appear alternately with the other displays:

LCD-display 2	Signification
r.u.n.	• timer is started • timer is not running yet
run	• timer is started • timer is running
End	• Timer elapsed • Timer canceled
off	• deletion of End display by pressing any key • timer is off

With active timer, the time can be adjusted by changing parameter t.t i at extended operating level.

The status of an active timer can be output (ConF / Out.x / t imE). A timer is set when started and reset by elapsing or cancelation.

9.4 End / cancelation of the timer

The timer can be canceled. After elapse of the timer, the controller continues operating using the function dependent on operating mode.

Cancelation is possible by:

- **changing the timer setting t.t i = 0 (at extended operating level)**
- **switching over digital input di1 (SP.2 → SP or Y → Y2 switch-over) configured as a push-button).**
- **via the serial interface**

If the digital input is defined as a switch or if the Func function with SP/SP2 or Y/Y2 switch-over is configured, the signal change will cancel the timer.

Mode	**Behaviour after elapse**		**Behaviour after changing t.t.r = 0**		**Cancelation (before reaching the timer band)**		**Cancelation (after reaching the timer band)**	
1	display: controller:	End Y2	display: controller:	none Y2	display: controller:	none Y2	display: controller:	End Y2
2	display: controller:	End SP	display: controller:	none SP	display: controller:	none Y2	display: controller:	End Y2
3	display: controller:	End Y2	display: controller:	none Y2	-		display: con- troller:	End Y2
4	display: controller:	End SP	display: controller:	none SP	-		display: controller:	End Y2
5 *	display: controller:	none SP	display: controller:	none SP	-		display: controller:	none SP
6	Anzeige: Regler:	End SP	Anzeige: Regler:	keine SP	Anzeige: Regler:	keine SP	Anzeige: Regler:	End SP

Das Timersignal t.tmE wird mit Start des Timers gesetzt, mit Ende oder Abbruch zurückgesetzt.
* Der Timerstart erfolgt über Umschaltung Y2 → Y, der Timer schaltet auf Y2, beim Ende wird von Y2 → Y umgeschaltet.

10 Configuration level

10.1 Configuration survey

Dependent on the device version and further adjusted configurations, configurationdata can be hidden.

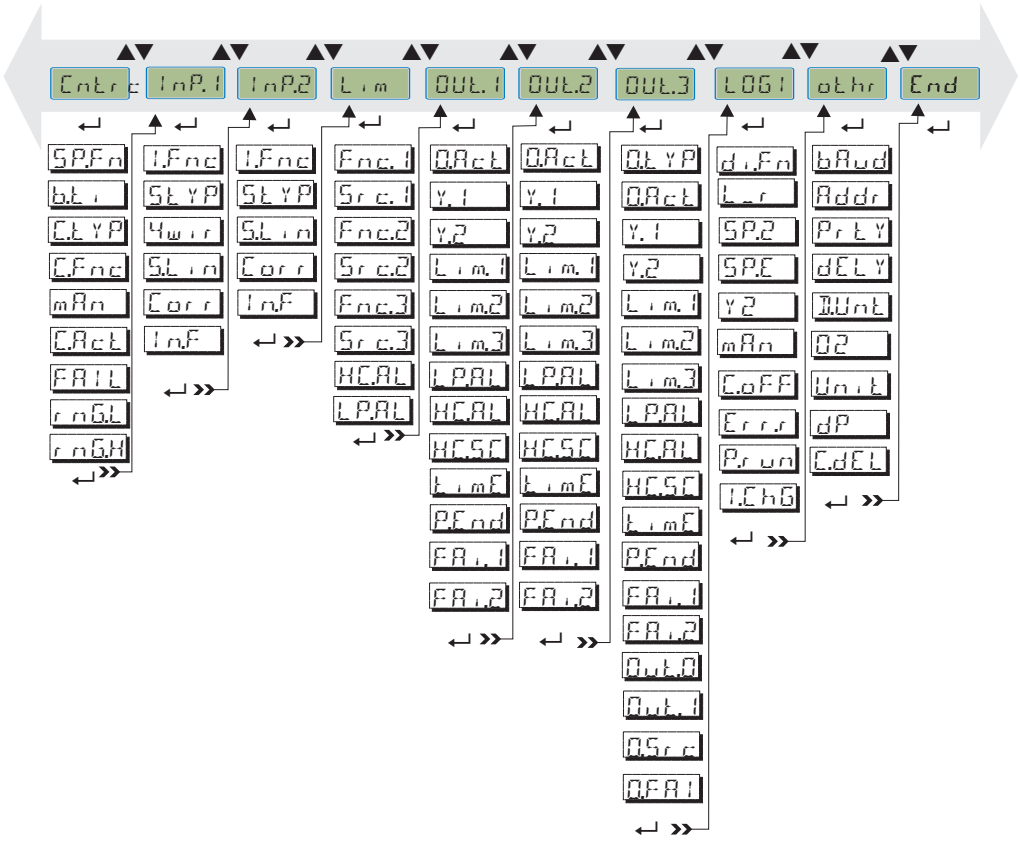

Adjustment:

- **The configuratiuons can be adjusted by means of keys ▲▼.**
- **Transition to the next configurationelement is by pressing key ↵.**
- **After the last configuration of a group, donE is displayed and followed by automatic change to the next group**

Return to the beginning of a group is by pressing the ↵key for 3 sec.

Please check all interdependent parameters for their validity.

10.2 Configurations

Dependent on device version und adjusted configurations values not needed become hidden.

✪ Entrys marked with this symbol are selectable only with existing device-option.

Controller Cntr

Name	Value range	Description	
SP.Fn		setpoint processing	
	0	Setpoint/ ext. Setpoint	
	1	program controller	
	2	timer mode 1	
	3	timer mode 2	
	4	timer mode 3	
	5	timer mode 4	
	6	timer mode 5	
	7	timer mode 6	
	8	standard + SP-E	
	9	programmer + SP.E	
tol	0...9999	timer tolerance	
C.typ		process value processing ✪	
	0	process value = x1	
	1	ratio controller (x1+oFFS)/x2	
	2	difference (x1 - x2)	
	3	max (x1, x2)	
	4	min (x1, x2)	
	5	mean value (x1, x2)	
	6	Switch-over (x1, x2)	
	7	Oxygen measurement with const. probe temperature	
	8	Oxygen measurement with measured probe temperature	
C.Fnc		control behaviour	
	0	signaller (on/off controller)	
	1	PID controller (2-point and continuous)	
	2	D/Y switch-over	
	3	2 x PID (3-point and continuous)	
	4	3-point stepping controller	
mAn		automatic/manual switching	
	0	Manual operation not permitted	
	1	Manual operation admitted	
C.Act		direction of operation	
	0	inverse, e.g. heating	
	1	direct, e.g. cooling	
FAIL		behaviour at sensor break	
	0	outputs off	
	1	switch to Y2	
	2	mean correcting value	
rnG.L		lower control range [phys]	
rnG.H		upper control range [phys]	
Adt0		Tuning of cycle time	
	0	automatische Optimierung	
	1	keine Optimierung	

Inputs InP.1 and InP.2

Name	Value range	Description	
1.Fnc		function	
	0	no function	
	1	heating current input	
	2	External setpoint	
	4	2nd process value X2	
	6	no controller input	
	7	process value X1	
S.typ		sensor type	
	0	Thermocouple type L (-100...900°C), Fe-CuNi DIN	
	1	Thermocouple type J (-100...1200°C), Fe-CuNi	
	2	Thermocouple type K (-100...1350°C), NiCr-Ni	
	3	Thermocouple typeN (-100...1300°C), Nicrosil-Nisil	
	4	Thermocouple type S (0...1760°C), PtRh-Pt10%	
	5	Thermocouple type R (0...1760°C), PtRh-Pt13%	
	6	Thermocouple type T (-200...400°C), Cu-CuNi	
	7	Thermocouple type C (0...2315°C), W5%Re-W26%Re	
	8	Thermocouple type D (0...2315°C), W3%Re-W25%Re	
	9	Thermocouple type Typ E (-100...1000°C), NiCr-CuNi	
	10	Thermocouple type Typ B (0/100...1820°C), PtRh-Pt6%	
	18	special thermocouple (Linearization necessary)	
	20	Pt100 (-200.0 ... 100,0 (150)°C)	
	21	Pt100 (-200.0 ... 850,0 °C)	
	22	Pt1000 (-200.0...850.0 °C)	
	23	Special 0...4500 Ohm (default as KTY11-6)	
	24	Special 0...450 Ohm	
	25	Special 0...1600 Ohm	
	26	Special 0...160 Ohm	
	30	Current 0/4...20mA	
	31	Current: 0...50 mA AC (HC input Inp2 only)	
	40	Voltage 0...10V / 2...10 V (Inp1 only)	
	41	Special (-2,5...115 mV)	
	42	Special (-25...1150 mV)	
	43	Special (-25...90 mV)	
	44	Special (-500...500 mV)	
	45	Special (-5...5 V) (Inp1 only)	
	46	Special (-10...10 V) (Inp1 only)	
	47	Special (-200..200 mV)	
	50	Potentiometer 0...160 Ohm	
	51	Potentiometer 0...450 Ohm	
	52	Potentiometer 0...1600 Ohm	
	53	Potentiometer 0...4500 Ohm	
4wire		Resistance connection type(only for Inp.1)	
	0	3 wire connection	
	1	4 wire connection	
S.Lin		linearization	
	0	no linearization	
	1	special linearization	
Corr		measured value correction	
	0	no correction	
	1	offset correction	
	2	2-point correction	
	3	scaling	
In.F	OFF, -1999...9999	alternative value INP	
fAI1 (fAI2)		Forcing of analog input INP1, INP2 ✪ (only visible with BlueControl®!)	
	0	not active	
	1	the value for this analog input is defined via interface.	

Limits Lim1...Lim3

Name	Value range	Description	
Fnc.1 (Fnc.2) (Fnc.3)		function of limit 1 (2, 3)	
	0	switched off	
	1	measurement value	
	2	measurement value with latch	
Src.1 (Src.2) (Src.3)		source of limit 1 (2, 3)	
	0	process value	
	1	control deviation	
	2	deviation + suppression	
	3	INP1	
	4	INP2	
	6	Setpoint	
	7	output value	
	11	deviation + suppression without time limit	
HCAL		heating current alarm	
	0	switched off	
	1	overload + short circuit	
	2	break + short circuit	
LPAL		loop alarm	
	0	no LOOP alarm	
	1	LOOP alarm active	
C.Std	OFF; 1 ... 9999999	Control operating hours (only visible with BlueControl®!)	
C.Sch	OFF; 1 ... 9999999	Control alternation number (only visible with BlueControl®!)	

Outputs Out.1, Out.2, Out.3,(relay/analog) ✪

Name	Value range	Description	
O.typ		type of OUT (only Out.3 - analog) ✪	
	0	relay/logic	
	1	0 ... 20 mA continuous	
	2	4 ... 20 mA continuous	
	3	0 ... 10 V continuous	
	4	2 ... 10 V continuous	
	5	transmitter supply	
O.Act		direction of operation	
	0	direct	
	1	inverse	
Y.1		controller output Y1	
	0	not active	
	1	active	
Y.2		controller output Y2	
	0	not active	
	1	active	
Lim.1		signal limit 1	
	0	not active	
	1	active	
Lim.2		signal limit 2	
	0	not active	
	1	active	
Lim.3		signal limit 3	
	0	not active	
	1	active	
LPAL		loop alarm	
	0	not active	
	1	active	
HCAL		heating current alarm	
	0	not active	
	1	active	

Name	Value range	Description	
HC.SC		SSR short circuit	
	0	not active	
	1	active	
t.mE		timer run	
	0	not active	
	1	active	
P.End		program end	
	0	not active	
	1	active	
FA1.1		signal INP1 fail	
	0	not active	
	1	active	
FA1.2		signal INP2 fail	
	0	not active	
	1	active	
Sb.ER		System bus error message µ	
	0	nicht aktiv	
	1	aktiv	
Out.0	-1999...9999	scaling 0% (only for Out.3 analog) ✪	
Out.1	-1999...9999	scaling 100% (only for Out.3 analog) ✪	
O.Src		signal source (only for Out.3 analog) ✪	
	0	not active	
	1	controller output y1 (cont.)	
	2	controller output y2 (cont.)	
	3	process value	
	4	Effective setpoint	
	5	control deviation	
	7	INP1	
	8	INP2	
O.FAI		fail behaviour ✪	
	0	upscale	
	1	downscale	
InF.1		Status message for operating hours	
	0	nicht aktiv	
	1	aktiv	
InF.2		Status message for number of switching cycles	
	0	nicht aktiv	
	1	aktiv	
fOut		forcing of the output (only visible with BlueControl®!)	
	0	not active	
	1	the value for this analog input is defined via interface.	

Signal definition LOGI

Name	Value range	Description	
di.Fn		function of inputs	
	0	direct	
	1	inverse	
	2	toggle key function	
L_r		block front (local/remote change Remote: front functions are blocked)	
	0	interface only	
	1	always on	
	2	di1 switches	
	5	Func switches	
	7	Limit 1 switches	
	8	Limit 2 switches	
	9	Limit 3 switches	

Name	Value range	Description	
SP.2		2nd setpoint	
	0	interface only	
	2	di1 switches	
	5	Func switches	
	7	Limit 1 switches	
	8	Limit 2 switches	
	9	Limit 3 switches	
SP.E		external setpoint	
	0	interface only	
	1	always on	
	2	di1 switches	
	5	Func switches	
	7	Limit 1 switches	
	8	Limit 2 switches	
	9	Limit 3 switches	
Y2		2nd actuator value	
	0	interface only	
	2	di1 switches	
	5	Func switches	
	7	Limit 1 switches	
	8	Limit 2 switches	
	9	Limit 3 switches	
mAn		automatic/manual switching	
	0	interface only	
	1	always on	
	2	di1 switches	
	5	Func switches	
	7	Limit 1 switches	
	8	Limit 2 switches	
	9	Limit 3 switches	
C.oFF		controller off	
	0	interface only	
	2	di1 switches	
	5	Func switches	
	7	Limit 1 switches	
	8	Limit 2 switches	
	9	Limit 3 switches	
Err.r		Reset error list	
	0	interface only	
	2	di1 switches	
	7	Limit 1 switches	
	8	Limit 2 switches	
	9	Limit 3 switches	
P.run		program run/stop	
	0	interface only	
	2	di1 switches	
	5	Func switches	
	7	Limit 1 switches	
	8	Limit 2 switches	
	9	Limit 3 switches	
I.ChG		switchover Inp1/ Inp2/ di1	
	0	interface only	
	2	di1 switches	
	7	Limit 1 switches	
	8	Limit 2 switches	
	9	Limit 3 switches	
fDI1		forcing of the digital input (only visible with BlueControl®!)	
	0	not active	
	1	the value for this analog input is defined via interface.	

Miscellaneous othr

Name	Value range	Description	
bAud		baudrate ✪	
	0	2400 Baud	
	1	4800 Baud	
	2	9600 Baud	
	3	19200 Baud	
	4	38400 Baud	
Addr	1...247	address ✪	
PrtY		parity ✪	
	0	No parity, 2 stop bits	
	1	even parity	
	2	odd parity	
	3	No parity, 1 stop bit	
dELY	0...200	response delay [ms] ✪	
S.IF		system interface ✪	
	0	switched off	
	1	switched on	
I.Unt		display unit	
	0	no unit	
	1	temperature unit (see Unit)	
	2	O2 unit (see O2)	
	3	%	
	4	bar	
	5	mbar	
	6	Pa	
	7	kPa	
	8	psi	
	9	l	
	10	l/s	
	11	l/min	
	12	Ohm	
	13	kOhm	
	14	m0	
	15	A	
	16	mA	
	17	V	
	18	mV	
	19	kg	
	20	g	
	21	t	
	22	Text of physical unit	
O2		parameter unit for O2 ✪	
	0	Parameter in ppm with O2 function	
	1	Parameter in % with O2 function	
Unit		unit	
	0	no unit	
	1	°C	
	2	°F	
	3	Kelvin	
dP		decimal points	
	0	0 digits behind the decimal point	
	1	1 digits behind the decimal point	
	2	2 digits behind the decimal point	
	3	3 digits behind the decimal point	
CdEL	0..200	modem delay [ms]	
FrEq		Switch over 50/60 Hz (only visible with BlueControl®!)	
	0	Netfrequency 50 Hz	
	1	Netfrequency 60 Hz	

Name	Value range	Description	
ICof		Block controller off (only visible with BlueControl®!)	
	0	Released	
	1	Blocked	
IAda		Block auto tuning (only visible with BlueControl®!)	
	0	Released	
	1	Blocked	
ILat		Block error memory (only visible with BlueControl®!)	
	0	Released	
	1	Blocked	
IExo		Block extended operating level (only visible with BlueControl®!)	
	0	Released	
	1	Blocked	
Pass	OFF...9999	Password (only visible with BlueControl®!)	
IPar		Block parameter level (only visible with BlueControl®!)	
	0	Released	
	1	Blocked	
ICnf		Block configuration level (only visible with BlueControl®!)	
	0	Released	
	1	Blocked	
ICal		Block calibration level (only visible with BlueControl®!)	
	0	Released	
	1	Blocked	
T.Dis2		Settings for text in display 2 (max. 5 digits) (only visible with BlueControl®!)	

Linearization Lin

only visible with BlueControl®!

Name	Value range	Description	
U.LinT		Temperature unit of the linearization table	
	0	without unit	
	1	in Celsius	
	2	in Fahrenheit	
	3	in Kelvin	
In.1 … In.16	OFF (ab In.3) -1999...9999	input 1 … input 16	
Ou.1 … Ou.16	-999.0 … 9999	output 1 … output 16	

Depending on equipment version and the configuration unused parameters are hidden.

Value U.LinT defines the unit of input values specified for linearization of temperature values. Value entry in Celsius despite display of the measured value in Fahrenheit is possible.

- Specify the input signals mV, V, mA, % or Ohm dependent on input type.
- For special thermocouples (S.tYP = 18), specify the input values in µV and the output values in the temperature unit adjusted in U.LinT.
- For special resistance thermometer (KTY 11-6) (S.tYP = 23), specify the input values in Ohm and the output value in the temperature unit adjusted in U.LinT .

Resetting to factory setting (default)

→ chapter 15.4

11 Parameter-level

11.1 Parameter-survey

Dependent on device version und adjusted configurations values not needed become hidden.
The data which can be operated via the front panel are shown below.

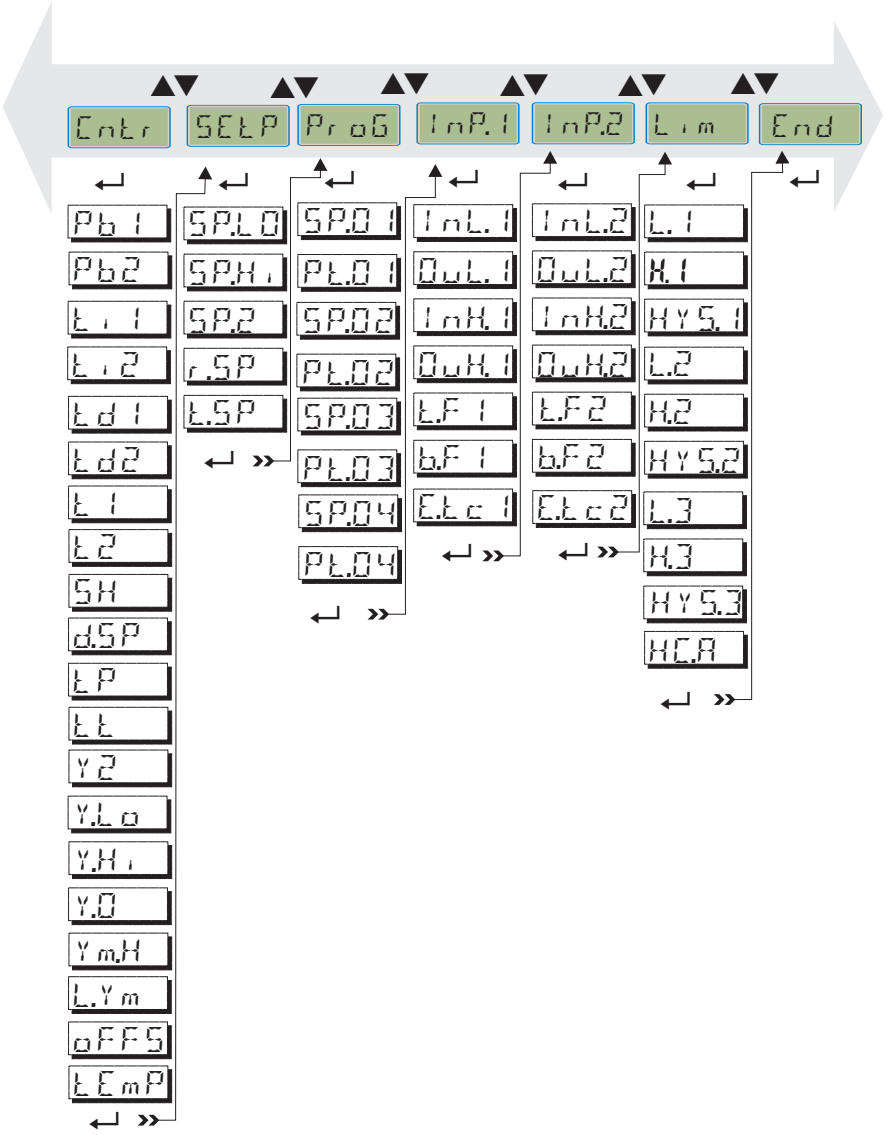

- **Parameters can be adjusted with ▲▼ - keys.**
- **Stepping to the next parameter by pressing the ↵- key.**
- **After the last parameter of a group donE appears in the display and the controller steps automatically to the next group.**

Stepping back to the beginning of a group is done by pressing the ↵- key for 3 s.
If, for 30 s no key is pressed, the controller returns to the operating level (Timeout = 30 s).

11.2 Parameters

✪ Entrys marked with this symbol are selectable only with existing device-option.

Controller Cntr

Name	Value range	Description	
Pb.1	1...9999	proportional band 1 [phys]	
Pb2	1...9999	proportional band 2 [phys]	
t.1	off, 1...9999	integral action 1 [s]	
t.2	off, 1...9999	integral action 2 [s]	
td1	off, 1...9999	derivative action 1 [s]	
td2	off, 1...9999	derivative action 2 [s]	
t.1	0,4...9999	min. cycle time 1 [s]	
t2	0,4...9999	min. cycle time 2 [s]	
SH	0..9999	neutral zone [phys]	
d.SP	-1999...9999	additional contact D / Y [phys]	
tP	off, 0.1...9999	min. pulse length [s]	
tt	3...9999	motor travel time [s]	
Y2	-100...100	correcting variable 2	
Y.Lo	-105..105	lower output range [%]	
Y.Hi	-105...105	upper output range [%]	
Y.0	-105...105	working point [%]	
Ym.H	-100...100	max. mean value [%]	
L.Ym	1...9999	max. deviation mean [phys]	
oFFS	-120...120	ratio offset	
tEmP	0...9999	probe temperature ✪	

Setpoint SEtP

Name	Value range	Description	
SPLO	-1999...9999	lower setpoint range [phys]	
SPHi	-1999...9999	upper setpoint range [phys]	
SP.2	-1999...9999	2nd setpoint [phys]	
r.SP	off,0.01...9999	setpoint ramp [/min]	
t.SP	0.0...9999	timer dwell time [min]	

Programmer ProG

Name	Value range	Description	
SP.01	-1999...9999	target setpoint 1	
PL.01	0.0...9999	segment time 1 [min]	
SP.02	-1999...9999	target setpoint 2	
PL.02	0.0...9999	segment time 2 [min]	
SP.03	-1999...9999	target setpoint 3	
PL.03	0.0...9999	segment time 3 [min]	
SP.04	-1999...9999	target setpoint 4	
PL.04	0.0...9999	segment time 4 [min]	

Inputs InP.1, InP.2

Name	Value range	Description	
InL.1 (InL.2)	-1999...9999	lower input value [phys]	
OuL.1 (OuL.2)	-1999...9999	lower output value [phys]	
InH.1 (InH.2)	-1999...9999	upper input value [phys]	
OuH.1 (OuH.2)	-1999...9999	upper output value [phys]	

Name	Value range	Description	
L.F 1 (L.F2)	0...999,9	filter time [s]	
E.t c 1 (E.t c2)	OFF, 0...100	external TC[°C]	

Limit Lim1...Lim3

Name	Value range	Description	
L. 1	off, -1999...9999	lower limit 1 [phys]	
H. 1	off, -1999...9999	upper limit 1 [phys]	
HYS. 1	0...9999	hysteresis 1 [phys]	
L.2	off, -1999...9999	lower limit 2 [phys]	
H.2	off, -1999...9999	upper limit 2 [phys]	
HYS.2	0...9999	hysteresis 2 [phys]	
L.3	off, -1999...9999	lower limit 3 [phys]	
H.3	off, -1999...9999	upper limit 3 [phys]	
HYS.3	0...9999	hysteresis 3 [phys]	
HC.A	0...9999	heat current limit [A]	

Resetting to factory setting (default)

→ chapter 15.4

12 Calibrating-level

In the calibration menu (CAL) the measured value can be adjusted.

The measured value correction (CAL) is accessible only, if ConF / InP/Corr = 1 or 2 was selected.

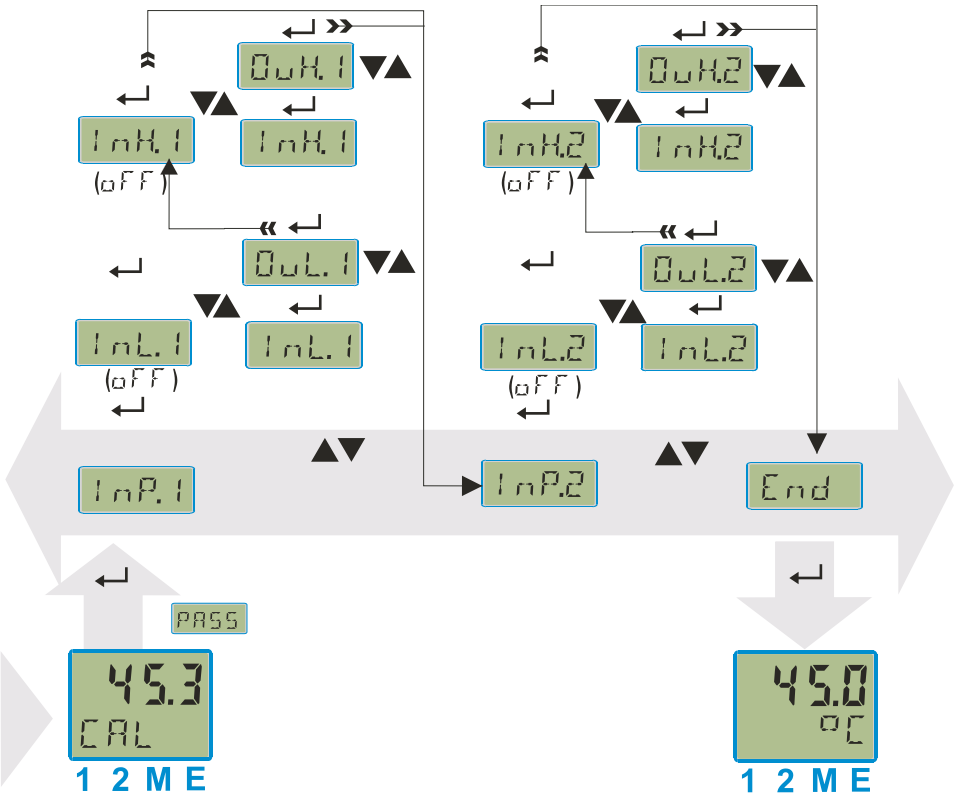

Two methods are available

- **Offset - correction**
- **2-point - correction**

The InL.x and InH.x values are presented with one digit. As reference for the correcting calculation the full resolution is used.

Deleting the correction values is done fastest by switching off the measured value correction Corr =0 or setting the scaling parameters to a linear behaviour.

The values InL.x and InH.x show the real measured value. The output values OuL.x and OuH.x start with the preset value.

12.1 Offset-correction

The offset-correction shifts the input value by a pre-defined value.
Parameter setting: (ConF / InP / Corr = I)

- On-line offset correction at the process is possible.

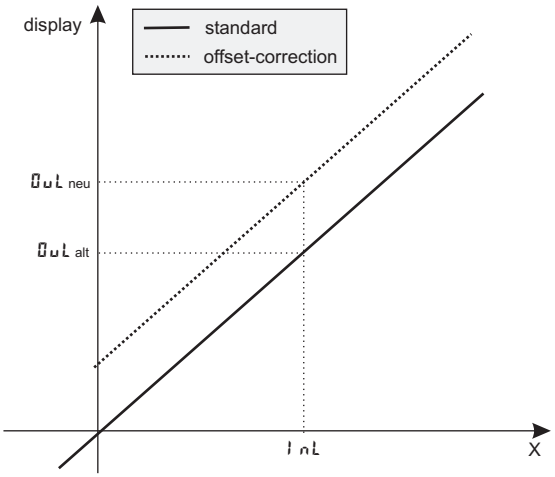

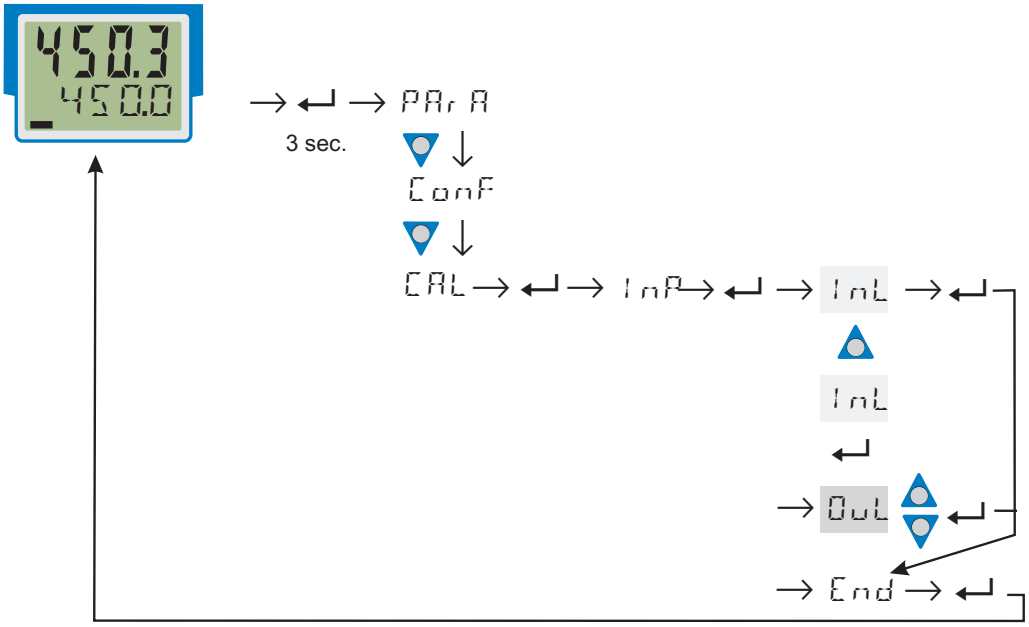

InL : The actual input value of the scaling point is displayed.
The correction function is activated by means of keys ▲▼ ; the display changes from Off to the measured value.
The operator must wait, until the process is at rest.
Subsequently, the input value has to be confirmed by pressing key ↵.

OuL : The scaling point display value is indicated.
The operator can correct the display value by pressing keys ▲▼. Subsequently, he presses key ↵ to confirm the display value.

12.2 2-point-correction

2-point correction can change the offset and gradient of the input curve.
Parameter setting:
(ConF / InP / Corr = 2):

- 2-point correction is possible off-line by means of an input signal simulator,
- or on-line in 2 steps: correct one value first and the second value subsequently, e.g. after heating up the furnace..

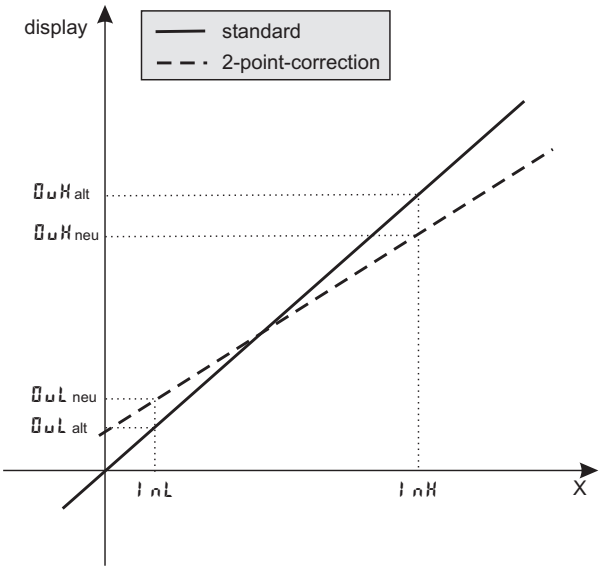

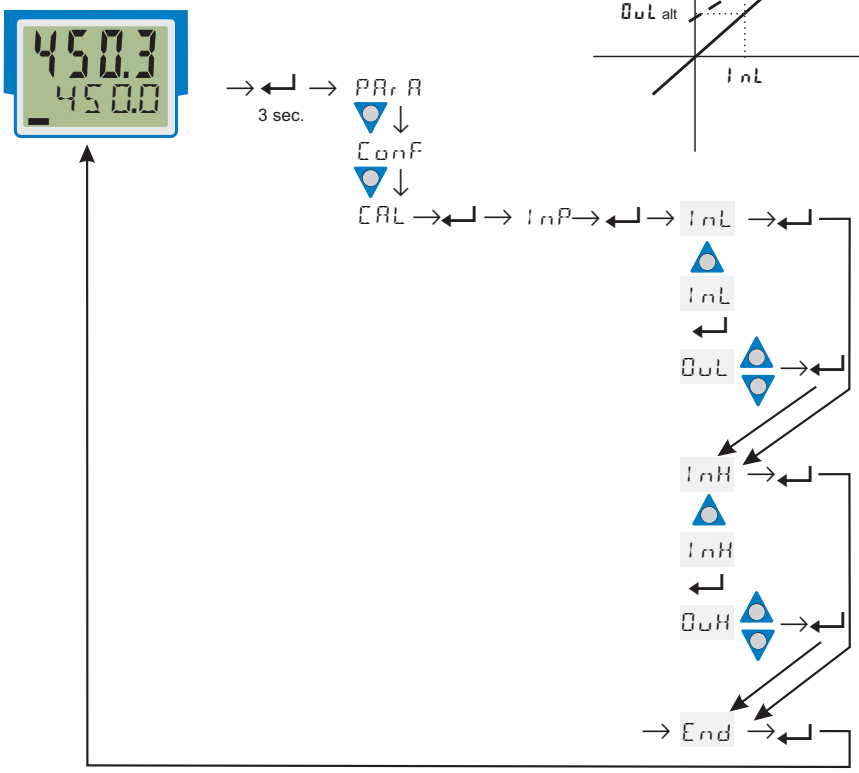

InL: The input value of the lower scaling point is displayed.
The correction function is activated via keys ▲▼ ; the display changes from Off to the measurement value.
Adjust the lower input value by means of an input signal simulator and press key ↵ to confirm the input value.

OuL: The display value of the lower scaling point is indicated.
Press keys ▲▼ to correct the lower display value and press key ↵ to confirm the display value.

InH: The input value of the second scaling point is displayed.
Activate the corrective function by pressing keys ▲▼ ; the display changes from Off to the measured value.
Adjust the upper input value by means of the input signal simulator and confirm the input value by pressing key ↵.

OuH: The display value of the upper scaling point is indicated.
Correct the upper display value by pressing keys ▲▼ and press key ↵ to confirm the display value.

13 Engineering Tool BlueControl®

The Engineering Tool BlueControl® is the projecting environment for the BluePort® controller series as for the ***rail line*** family of PMA. The following 3 versions with graded functionality are available:

Functionality	Mini	Basic	Expert
parameter and configuration setting	yes	yes	yes
download: transfer of an engineering to the controller	yes	yes	yes
online-mode / visualization	SIM only	yes	yes
defining an application specific linearization	SIM only	yes	yes
configuration in the extended operating level	yes	yes	yes
upload: reading an engineering from the controller	SIM only	yes	yes
basic diagnostic functions	no	no	yes
saving data file and engineering	no	yes	yes
printer function	no	yes	yes
online documentation, help	yes	yes	yes
implementation of measurement value correction	yes	yes	yes
data acquisition and trend display	SIM only	yes	yes
net- / multiple licence	no	nein	yes
wizard function	yes	yes	yes
extended simulation	no	no	yes

The mini version is - free of charge - at your disposal as download at PMA homepage *www.pma-online.de* or on the PMA-CD (please ask for).

At the end of the installation the licence number has to be stated or DEMO mode must be chosen.

At DEMO mode the licence number can be stated subsequently under *Help → Licence → Change*.

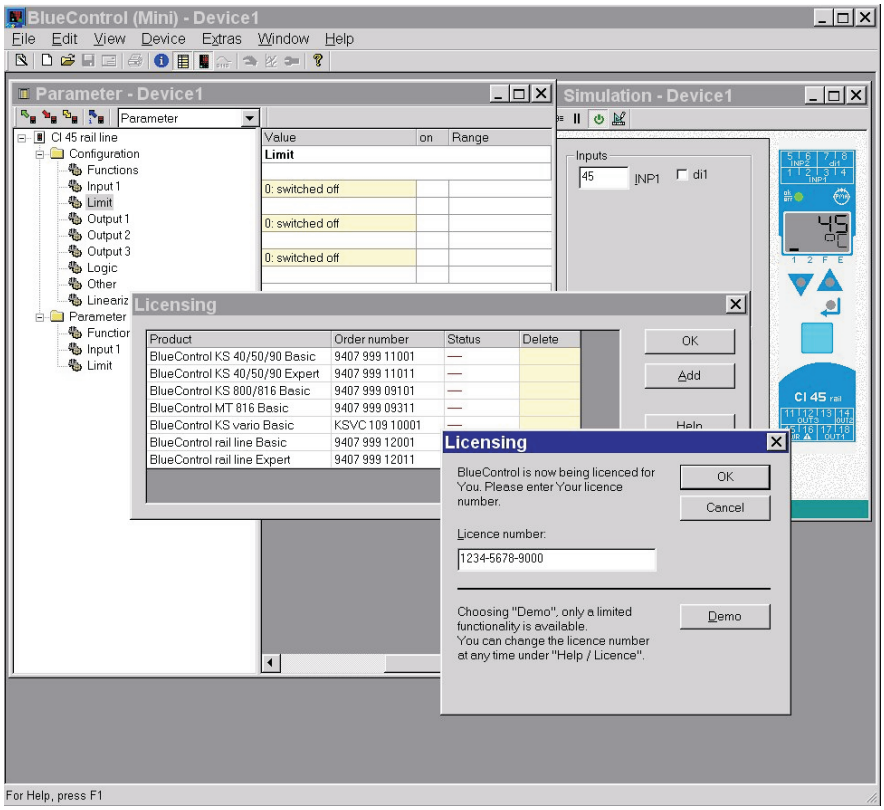

14 Versions

Universalcontroller KS 45 K S 4 5 - 1 _ _ - _ _ 0 0 - _ 00

1 universal input, 1 digital input
with display and BluePort®-interface

no plug-in connectors	**0**					
with screw-terminal plug-in connectors	**1**					
90...260V AC, 2 relay, INP2 as current input (0...20mA)		**0**				
18...30VAC/18...31VDC, 2 relay, INP2 as current input (0...20mA)		**1**				
90...260V AC, mA/V/ logic + 2 relay, INP2 as current input (0...20mA)		**2**				
18...30VAC/18...31VDC, mA/V/ logic +2 relay, INP2 as current input (0...20mA)		**3**				
90..260V AC, 2 optocoupler output, 1 relay, INP2 as current input (0...20mA a. 0...50 mA AC)		**4**				
18...30VAC/18..31VDC, 2 optocoupler output, 1 relay, INP2 as current input (0...20mA u. 0...50 mA AC)		**5**				
no option			**0**			
RS 485 / MODBUS - protocol			**1**			
System interface (eng for 24V option)			**2**			
di1 as contact input				**0**		
di1 as optocoupler input				**1**		
INP2 as universal input, O_2-measurement, di1 as contact input				**2***		
INP2 as universal input, O_2-measurement, di1 as optocoupler input				**3***		
standard					**0**	
configuration to order					**9**	
standard (CE-certified)						**0**
certified to EN 14597 (replaces DIN 3440)						**D**
cULus certified						**U**

* not with optocoupler outputs (KS45-1x4... und KS45-1x5...)

Accessories delivered with the controller:

- **Operating note**
- **Rail-to-bus connector for the interface option**

Additional equipment with ordering data.

Documentation	(please order the associated documentation)	
operation manual KS 45	german	9499-040-71818
operation manual KS 45	english	9499-040-71811
interface description MODBUS rail line	german	9499-040-72018
interface description MODBUS rail line	english	9499-040-72011

Additional devices		Order-No..
PC-adapter for BluePort® interface		9407-998-00001
BlueControl® Mini	german/english	www.pma-online.de
BlueControl® with basic-licence rail line	german/english	9407-999-12001
BlueControl® with expert-licence rail line	german/english	9407-999-12011

15 Technical data

INPUTS

UNIVERSAL INPUT INP1

Resolution:	>14 bits
Decimal point:	0 to 3 decimals
Digital input filter:	adjustable 0.0...9,999 s
Scanning cycle:	100 ms
Linearization:	15 segments, adaptable with BlueControl®
Measurement value correction:	2-point or offset
Type:	single-ended (except for thermocouples)

Thermocouples (Table 1)

Input resistance:	≥1 MΩ
Influence of source resistance:	1 µV/Ω
Input circuit monitor:	sensor break, polarity

Cold-junction compensation

- internal

Typical additional error: ≤ ± 0.5 K (≤ 1.2 K max)

- external
  - constant reference 0...100 °C

Break monitoring

Sensor current:	≤1 µA
Operating sense:	configurable

Resistance thermometer (Table 2)

Connection technology:	3 -wire, 4-wire (not at INP2-usage)
Lead resistance:	max. 30 Ω (for max. end of span)

Input circuit monitoring: break and short circuit

Measurement span

The BlueControl® software enables the internal characteristic curve for the KTY 11-6 temperature sensor to be adapted.
Physical measurement range: 0...4,500 Ω

Current and voltage measurement (Table 3)

Span start and span: anywhere within the measurement range

Scaling:	freely selectable, –1,999...9,999
Input circuit	12,5% below span from 4...20mA / 2...10V
Monitoring (current):	start (2 mA)

O_2 measuring (option)

EMI measuring by means of INP1 (high-impedance mV inputs) suitable for probes with

- constant sensor temperature (heated probes), setting by means of parameter
- measured sensor temperature (non-heated probes), measurement by means of INP2

ADDITIONAL INPUT INP2 (CURRENT)

Resolution:	>14 bits
Digital input filter:	adjustable 0.0...9,999 s
Scanning cycle:	100 ms
Linearization:	as for INP1
Measurement value correction:	2-point or offset
Type:	single-ended

Current measurement

Input resistance:	approx. 49 Ω
Span start and span:	anywhere between 0 and 20 mA
Scaling:	freely selectable –1,999...9,999
Input circuit monitoring:	12,5% below span start (2 mA)

Table 1 Thermocouple measurement ranges

thermocouple type		measuring range		error	typ. resolution (∅)
L	Fe-CuNi (DIN)	-100...900°C	-148...1652°F	≤ 2 K	0,1 K
J	Fe-CuNi	-100...1200°C	-148...2192°F	≤ 2 K	0,1 K
K	NiCr-Ni	-100...1350°C	-148...2462°F	≤ 2 K	0,2 K
N	Nicrosil/Nisil	-100...1300°C	-148...2372°F	≤ 2 K	0,2 K
S	PtRh-Pt 10%	0...1760°C	32...3200°F	≤ 2 K	0,2 K
R	PtRh-Pt 13%	0...1760°C	32...3200°F	≤ 2 K	0,2 K
T**	Cu-CuNi	-200...400°C	-328...752°F	≤ 2 K	0,05 K
C	W5%Re-W26%Re	0...2315°C	32...4199°F	≤ 3 K	0,4 K
D	W3%Re-W25%Re	0...2315°C	32...4199°F	≤ 3 K	0,4 K
E	NiCr-CuNi	-100...1000°C	-148...1832°F	≤ 2 K	0,1 K
B*	PtRh-Pt6%	0(100)...1820°C	32(212)...3308°F	≤ 3 K	0,4 K
special		-25....75 mV		≤ 0,1 %	0,01 %

* Values for type B apply from 400°C upwards
**Values apply from -80°C upwards

Table 2: Resistive inputs

type	measuring current	measuring range		error	typ. resolution (∅)
Pt100***	≤ 0,25 mA	-200...100 (150) °C	-328...212°F	≤ 1 K	0,1 K
Pt100		-200...850°C	-328...1562°F	≤ 1 K	0,1 K
Pt1000		-200...850°C	-328...1562°F	≤ 2 K	0,1 K
KTY 11-6*		-50...150°C	-58...302°F	≤ 2 K	0,1 K
special		0...4500 Ω**		≤ 0,1 %	0,01 %
special		0...450 Ω**		≤ 0,1 %	0,01 %
Poti		0...160 Ω**		≤ 0,1 %	0,01 %
Poti		0...450 Ω**		≤ 0,1 %	0,01 %
Poti		0...1600 Ω**		≤ 0,1 %	0,01 %
Poti		0...4500 Ω**		≤ 0,1 %	0,01 %

* Default setting is the characteristic for KTY 11-6 (-50...150°C)

** Including lead resistance

*** up to 150°C at reduced lead resistance

Table 3: Current and voltage input

measuring range	inpur resistance	error	typ. resolution (∅)
0...20 mA	20 Ω (voltage demand ≤ 2,5 V)	≤ 0,1 %	1,5 µA
0...10 Volt	≈ 110 k Ω	≤ 0,1 %	0,6 mV
-10...10 Volt	≈ 110 k Ω	≤ 0,1 %	1,2 mV
-5...5Volt	≈ 110 k Ω	≤ 0,1 %	0,6 mV
-2,5...115 mV*	≥ 1MΩ	≤ 0,1 %	6 µV
-25...1150 mV*	≥ 1MΩ	≤ 0,1 %	60 µV
-25...90 mV*	≥ 1MΩ	≤ 0,1 %	8 µV
-500...500 mV*	≥ 1MΩ	≤ 0,1 %	80 µV
-200...200 mV*	≥ 1MΩ	≤ 0,1 %	420 µV

* for INP1: high-impedance, without break monitoring
for INP2: high-impedance, break monitoring always active

Heating current measurement

(via current transformer)

Input resistance:	approx. 49 Ω
Measurement span:	0...50 mA AC
Scaling:	freely selectable –1,999...9,999 A

ADDITIONAL INPUT INP2 (UNIVERSAL, OPTION)

Resolution:	>14 bits
Digital input filter:	adjustable 0.0...9,999 s
Scanning cycle:	100 ms
Linearization:	as for INP1
Measurement value correction:	2-point or offset
Type:	single-ended, exept thermocouples

Thermocouples (Table 1)

Cold-junction compensation

- internal,
  - additional error: typ.: ≤± 0,5 K
    max.: ≤ -2,5 K
- external,
  - constant setting 0...100 °C

Remaining technical data as for INP1

Resistance thermometer (Ταβλε 2)

Connection technology: 3-wire,

Remaining technical data as for INP1

Resistance measuring range

Remaining technical data as for INP1

Current and voltage measuring ranges (Ταβλε 3)

Remaining technical data as for INP1 except

- Voltage input ranges -10/0...10V, -5...5V are not possible.
- Millivolt input ranges: high-impedance input for low-impedance sources

CONTROL INPUT DI1

Configurable as direct or inverse switch or push button!

Contact input

Connection of potential-free contact that is suitable for switching 'dry' circuits.

Switched voltage:	5 V
Switched current:	1 mA

Optocoupler input

For active control signals.

Nominal voltage:	24 V DC, external supply
Logic '0':	-3...5 V
Logic '1':	15...30 V
Current demand:	max. 6 mA

OUTPUTS

SURVEY OF OUTPUTS

* All logic signals can be "OR-linked".

RELAY OUTPUTS OUT1, OUT2, OUT3

Contact type:	normally open *
Max. contact rating:	500 VA, 250 V, 2A resistive load, 48...62 Hz,
Min. contact rating:	6V, 1 mA DC
Swithing cycles (electrical):	for I= 1A/2A: ≥ 800.000 / 500.000 (at ~ 250V (resistive load))

** Versions with two relays OUT1 & OUT2 have a common terminal.*

Note:

If the relays OUT1, 2 and 3 are used to operate external contactors, these must be fitted with RC snubber circuits to manufacturer specifications to prevent excessive voltage peaks at switch-off.

OPTOCOUPLER OUTPUTS OUT1, OUT2 (OPTIONAL)

Galvanically isolated optocoupler outputs. Grounded load: common 'plus' control voltage

Switch rating:	18...32 V DC; max. 70 mA
Internal voltage drop:	≤ 1 V at Imax

Built-in protective circuits:
for short circuit, wrong polarity

Note:
A protective diode for inductive loads must be fitted externally.

OUT3 UNIVERSAL OUTPUT

Galvanically isolated from the inputs. Parallel current/voltage output with common 'minus' terminal (combined use only in galvanically isolated circuits).

Freely scalable	
Resolution:	14 bits
Tracking error I/U:	≤ 2%
Residual ripple:	≤±1%
Ripple (related to span end):	0...130kHz

Current output

0/4...20 mA, configurable, short-circuit proof.

Control range:	-0.5...23 mA
Load:	≤700 Ω
Load effect:	≤ 0.02%
Resolution:	≤ 1.5 µA
Error:	≤ 0.1%

Voltage output

0/2...10V, configurable, not permanently short-circuit proof

Control range:	-0.15...11.5 V
Load:	≥ 2 kΩ
Load effect: ≤ 0.06%	
Resolution:	≤ 0.75 mV
Error:	≤ 0.1%
Additional error when	≤ 0.09%

OUT3 as transmitter supply

using simultaneously the current output
Output: 22 mA / ≥ 13 V DC

OUT3 as logic signal

Load ≤ 700 Ω	0/≤ 23 mA
Load > 500 Ω	0/> 13 V

Galvanic isolation

Version 1

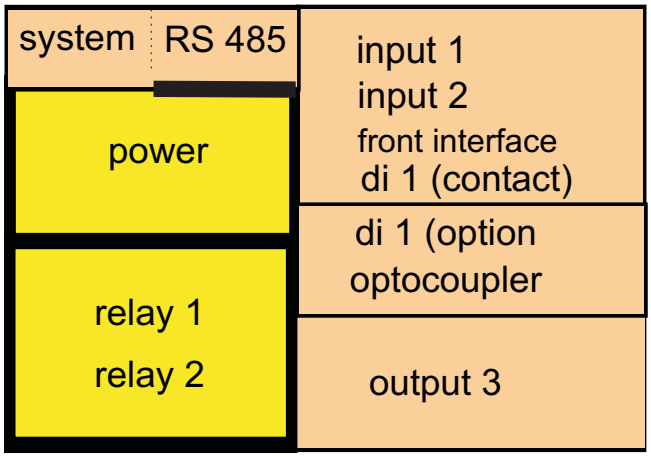

Version 2

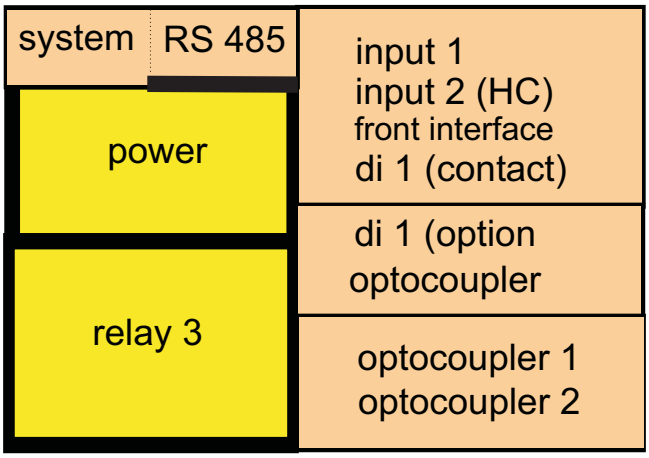

safety isolation
functional isolation

Galvanic isolation between inputs and outputs as well as from the supply voltage is provided.

Test voltages:

Between power supply and inputs/outputs:	2,3 kV AC, 1 min
Between inputs and outputs:	500 V AC; 1min

Max. permissible voltages:

Between inputs/outputs against earth:	≤ 33 V AC

POWER SUPPLY

Depending on ordered version:

AC supply

Voltage:	90...260 V AC
Frequency:	48...62 Hz
Consumption:	approx. 7 VA max.

Universal supply 24 V UC

AC supply:	18...30 V AC
Frequency:	48...62 Hz
DC supply:	18...31 V DC
Consumption:	approx. 4 VA / 3W max.

* Instruments with optional system interface:
energization is via the bus connector from field bus coupler or power supply module

Behaviour with power failure

Configuration and parameter settings:Permanent storage in EEPROM

BLUEPORT® FRONT INTERFACE

Connection to the controller front via a PC adapter (see 'Additional Accessories'). The BlueControl® software enables the KS 45 to be configured, parameters set, and operated.

BUS INTERFACE (OPTIONAL)

RS 485

Connection via bus connector fitted in the top-hat rail. Screened cables should be used.
Galvanically isolated

Type:	RS 485
Transmission speed:	2,400, 4,800, 9,600, 19,200, 38,400 bits/sec
Parity:	even, odd, none
Number of controllers per segment:	32
Address range:	1...247

Number of controllers per bus segment: 32

Protocol

MODBUS RTU

SYSTEM INTERFACE

For connection to field bus couplers (see system components)
Connection via bus connector fitted in the top-hat rail.

ENVIRONMENTAL CONDITIONS

Protection mode

Front panel:	IP 20
Housing:	IP 20
Terminals:	IP 20

Permissible temperatures

For specified accuracy:	-10...55°C
Warm-up time:	< 20 minutes
Temperature effect:	≤ 0,05 % / 10 K
add. influence to coldjunction compensation:	≤ 0,05 % / 10 K
Operating limits:	-20...60°C
Storage:	-30...70°C

Humidity

Max. 95%, 75% yearly average, no condensation

Shock and vibration

Vibration test Fc (DIN EN 60 068-2-6)

Frequency:	10...150 Hz
Unit in operation:	1g or 0.075 mm
Unit not in operation:	2g or 0.15 mm

Shock test Ea (DIN EN 60 068-2-27)

Shock:	15 g
Duration:	11 ms

Electromagnetic compatibility

Meets EN 61326-1 for continuous, unattended operation.

Interference radiation:

- Within the limits for class B instruments.

Immunity to interference:
Meets the test requirements for instruments in industrial areas.
Criteria for evaluation:

- Surge interference partly has marked effects, which decay after the interference stops.
- With high levels of surge interference on 24V AC mains leads, it is possible that the device is reset.

With HF interference, effects up to 50 µV can occur.

GENERAL

Housing front

Material:	Polyamide PA 6.6
Flammability class:	VO (UL 94)

Connecting terminals

Material:	Polyamide PA
Flammability class:	V2 (UL 94) for screw terminals V0 (UL 94) for spring-clamp terminals and bus connector

Electrical safety

Complies with EN 61 010-1

Over-voltage category II
Contamination degree 2
Protection class II

Electrical connections

Plug-in connector strips with choice of terminal type:

- Screw terminals or spring-clamp terminals, both for lead cross-sections from 0.2 to 2.5 mm^2.

Mounting method

Clip-on rail mounting (35 mm top-hat rail to EN 50 022).
Locked by means of metal catch in housing base.
Close-packed mounting possible.

Mounting position: vertical

Weight: 0.18 kg

Certifications

CE certified

Type tested to EN 14597 (replaces DIN 3440)

With certified sensors applicable for:

- Heat generating plants with outflow temperatures up to 120°C to DIN 4751
- Hot-water plants with outflow temperatures above 110°C to DIN 4752
- Thermal transfer plants with organic transfer media to DIN 4754
- Oil-heated plants to DIN 4755

cULus-certification

(Type 1, indoor use)
File: E 208286

Standard accessories

- Operating instructions
- With 'Interface' option: bus connector for fitting into top-hat rail

16 Index

0-9

2-point correction 66

A

Accessories 68
Additional equipment 68
Analog output . . . . . 30 - 31
Applications 5

B

Behaviour after supply v. on 17
BlueControl 67

C

Calibration (CAL) 64
Cleaning 8
Configuration examples
- 2-point controller 38
- 3-point controller 39
- 3-point stepping controller 40
- Continuous controller 41
- D - Y -Off controller 42
- Signaller 37

Configuration level
- Configuration parameters 54 - 60
- Parameter survey 53

Configuration-level (ConF)
- Configuration-parameter 54 - 60

Connecting
- Bus interface 12
- di1 12
- Inp1 11
- Inp2 12
- Out1, Out2 12
- Out3 12

Connecting diagram 11
Connection
- Inp1 12
- Inp2 12
- Out1, Out2 12

Connectors 10

D

Dismounting 9

F

Filter 25
Forcing 31
Forcing of the inputs 25
Front view . . . . . 16, 35 - 46
Functions 22

I

Input scaling . . . . . 23 - 24
Input value monitoring 27
Installation hints 15

L

Limit . . . . . 27 - 29
Linearization 60
Logic - output 31

M

Maintenance manager . . . . . 32 - 33
Manual tuning 46

N

Number of switching cycles 29

O

O2-measurement . . . . . 25 - 26
Offset-correction 65
Operating hours 29
Operating level 18
Operating structure 17
Operation . . . . . 16 - 34

P

Parameter-level (PArA)
- Parameter 62 - 63
- Parameter-survey 61

Programmer
- Changing segment end setpoint 48
- Changing segment time 48
- Parameter setting 47
- Set-up 47
- Starting/Stopping 47

S

Safety hints . . . . . 7 - 8
Self-tuning
- Cancellation 44
- Cancellation causes 44
- Start 44

Set-point processing . . . . . 35 - 36
Signaller 37
Spare parts 8

T

TAG - No. 21
Terminal connections . . . . . 11 - 12
Timer
- Display run-LED 51
- Operating modes 49
- Signal end 50
- Timer start 50
- Timer-run-time 50
- Timerstart 50
- Tolerance band 50

Transmitter power supply 31

U

Units 21

V

Versions 68

DANAHER
INDUSTRIAL CONTROLS

■ 2100 West Broad Street ■ Elizabethtown, NC 28337

Customer Service:
Tel.: +1.800.390.6405
Fax: +1.910.879.5486
pma.custserv@dancon.com

Technical Support
Tel.: +1.800.866.6659
Fax: +1.847.782.5277
pma.techsupport@dancon.com

For more information about DICG and our PMA brand process control products,visit our website:
www.pma-online.de ■ www.danaherindustrialcontrols.com ■ www.dancon.com

Copyright 2005 Danaher Industrial Controls Group ■ Printed in USA

PMA Prozeß- und Maschinen-Automation GmbH

Edition 06/2009 - Subject to change without notice - PMA_KS45_Rev02