EY5054

Y connection cable

Y SPLITTER CABLE LOW RANGE

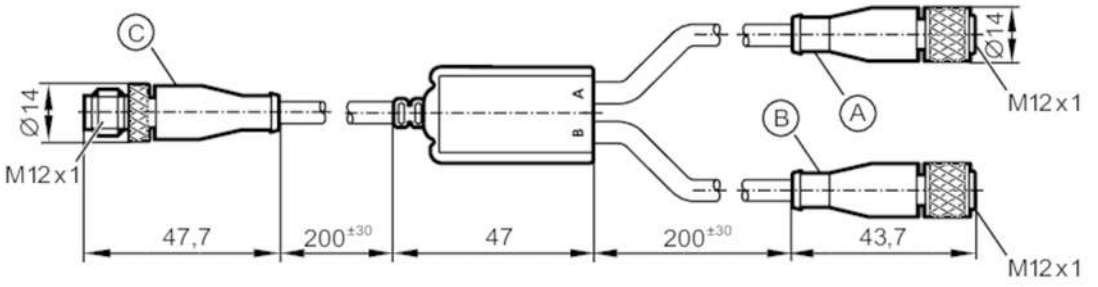

Application			
Special feature		Free from silicone; Halogen-free; Gold-plated contacts; Drag chain suitability	
Free from silicone		yes	
Electrical data			
Operating voltage	[V]	24 DC	
Protection class		III	
Max. current load total	[A]	3	
Operating conditions			
Ambient temperature	[°C]	-25...80	
Protection		IP 67	
Mechanical data			
Weight	[g]	58.7	
Moulded-body material		TPU	
Material nut		brass, nickel-plated	
Sealing material		FKM	
Drag chain suitability		yes	
Drag chain suitability		bending radius for flexible use	min. 15 x cable diameter
		bending cycles	> 1 Mio.
Remarks			
Pack quantity		1 pcs.	

Electrical connection - plug C

Connector: 1 x M12, straight; coding: A; Moulded body: TPU; Locking: brass, nickel-plated; Contacts: gold-plated; Tightening torque: 0.5...0.8 Nm

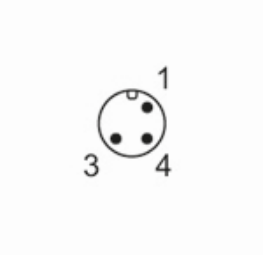

EY5054

Y connection cable

Y SPLITTER CABLE LOW RANGE

Electrical connection - Cable

Cable: 0.45 m, PVC, Halogen-free, black, Ø 4.2 mm; 3 x 0.25 mm²

Connection

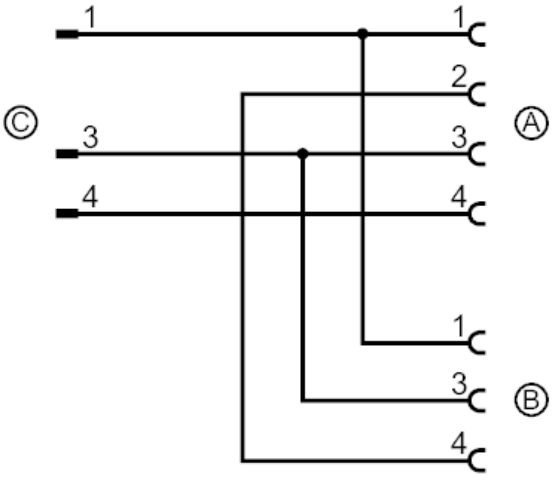

Electrical connection - socket A

Connector: 1 x M12, straight; coding: A; Moulded body: TPU; Locking: brass, nickel-plated; Sealing: FKM; Contacts: gold-plated; Tightening torque: 0.5...0.8 Nm

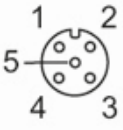

Electrical connection - socket B

Connector: 1 x M12, straight; coding: A; Moulded body: TPU; Locking: brass, nickel-plated; Sealing: FKM; Contacts: gold-plated; Tightening torque: 0.5...0.8 Nm

