LUMOTAST 16, pushbutton, round collar, momentary contact function, frontring metallic silver, 1 NO, bezel black



fields of application

- Measurement-control-regulation
- Electrical engineering
- Mechanical and system engineering
- Signalling systems
- Handheld terminals
- Industrial robots
- Model construction

special features

- Option: C-LAB variant with replaceable legend inserts
- Round mounting hole, diameter 16.2 mm
- Mounting depth: 18 mm
- Terminal: male quick-connect terminal 2.8 x 0.5 mm
- Gold or silver contacts
- Contacts: Standard: 1NO
- max 35 V / 100 mA
- Water jet protection class IP 65 and IP 67 on front

description

Through the use of RAFI tactile switches, the LUMOTAST 16 pushbuttons offer crisp, tactile feedback – with a distinct key click. They offer an impressively wide range of possible industrial uses and applications.

technical data

general

Bezel color	black
Property of bezel / mushroom	opaque
Collar color	black
Front ring color	metallic silver
Collar shape	round
Operating temperature, min.	-25 °C
Operating temperature, max.	70 °C
Storage temperature, min.	-40 °C
Storage temperature, max.	80 °C
illuminated	No
Packaging	Box
Packaging unit	10 pcs.
net weight	3.9 g
Operating life	500,000 cycles
B10	600,000 cycles
Degree of protection, front side, according to DIN EN 60529	IP65 IP67
UL Enclosure Type Rating front side	type 1

direct links

- RAFI eCatalog

The information in this data sheet only contains general descriptions and / or performance features, which may not apply precisely as described to the respective application, and which my change due to further product enhancements. The technical data, illustrations and other information about our products are the mere results of individual technical testing. These descriptions and other product features are only binding if they expressly agreed upon at the time of the conclusion of a binding contract. In all other cases, we reserve the right to make technical changes as well as changes of availability. Pictures and other graphic illustrations are approximations only. All product names may be trademarks or brand names of the RAFI Group or any other sub-supplier of RAFI. The use of such by any third parties for their own purposes may infringe the rights of the respective entity holding those rights.

RAFI GmbH & Co. KG

Ravensburger Str. 128-134
88276 Berg / Ravensburg
Germany
www.rafi-group.com,
info.headquarters@rafi-group.com

Vibration resistance according to standard IEC 60068-2-6	5 g at 10 - 500 Hz
oscillation restistance according to standard IEC 60068-2-6	5 g at 10...500 Hz
MOQ order	10 pcs.
RoHS compliant	Yes
REACH compliant	Yes

mounting diameters

Outside dimension, length	23.5 mm
Outside dimension, width	23.5 mm
Outside dimension, height	22.3 mm
Mounting hole	16.2 mm
Mounting depth	18 mm
Installation height	4.6 mm
Collar dimension	23.5 mm

mechanical data

Actuation function	momentary contact function
Contact function	1 NO
Contact system	Snap-action contact
Contact material	Gold
Fixing	Threaded ring
Solderability	No
Threaded ring torque, max.	0.8 Nm
Terminal on the rear	Flat quick-connect terminal 2.8 x 0.5

electrical data

Rated insulation voltage	42 V
Rated voltage, min.	0.02 V
Rated voltage, max.	35 V
Rated voltage, max. acc. to UL 60947	30 V AC (42,2 V peak)
Voltage type	DC
Rated operating voltage	0.02-35 V
Rated current, min.	0.0001 A
Rated current, max.	0.1 A
Rated power, max.	1 W

The information in this data sheet only contains general descriptions and / or performance features, which may not apply precisely as described to the respective application, and which my change due to further product enhancements. The technical data, illustrations and other information about our products are the mere results of individual technical testing. These descriptions and other product features are only binding if they expressly agreed upon at the time of the conclusion of a binding contract. In all other cases, we reserve the right to make technical changes as well as changes of availability. Pictures and other graphic illustrations are approximations only. All product names may be trademarks or brand names of the RAFI Group or any other sub-supplier of RAFI. The use of such by any third parties for their own purposes may infringe the rights of the respective entity holding those rights.

RAFI GmbH & Co. KG

Ravensburger Str. 128-134
88276 Berg / Ravensburg
Germany
www.rafi-group.com,
info.headquarters@rafi-group.com

drawings

Dimensioned drawing

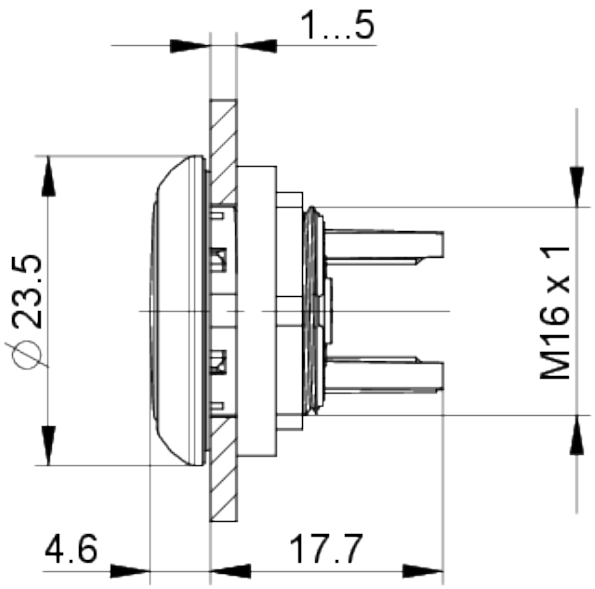

Mounting hole drawing

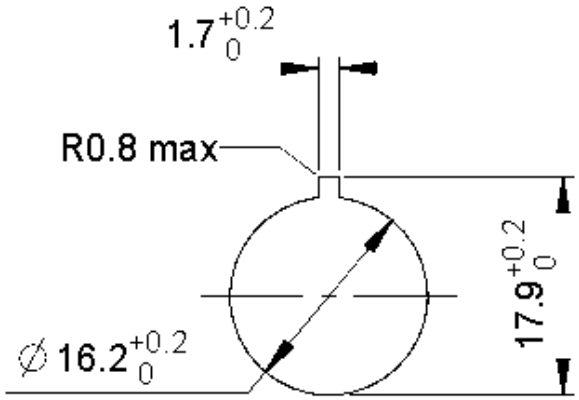

The information in this data sheet only contains general descriptions and / or performance features, which may not apply precisely as described to the respective application, and which my change due to further product enhancements. The technical data, illustrations and other information about our products are the mere results of individual technical testing. These descriptions and other product features are only binding if they expressly agreed upon at the time of the conclusion of a binding contract. In all other cases, we reserve the right to make technical changes as well as changes of availability. Pictures and other graphic illustrations are approximations only. All product names may be trademarks or brand names of the RAFI Group or any other sub-supplier of RAFI. The use of such by any third parties for their own purposes may infringe the rights of the respective entity holding those rights.

RAFI GmbH & Co. KG

Ravensburger Str. 128-134
88276 Berg / Ravensburg
Germany
www.rafi-group.com,
info.headquarters@rafi-group.com

Schematic diagram

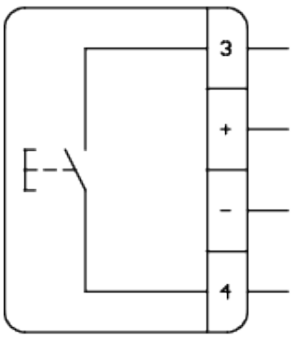

The information in this data sheet only contains general descriptions and / or performance features, which may not apply precisely as described to the respective application, and which my change due to further product enhancements. The technical data, illustrations and other information about our products are the mere results of individual technical testing. These descriptions and other product features are only binding if they expressly agreed upon at the time of the conclusion of a binding contract. In all other cases, we reserve the right to make technical changes as well as changes of availability. Pictures and other graphic illustrations are approximations only. All product names may be trademarks or brand names of the RAFI Group or any other sub-supplier of RAFI. The use of such by any third parties for their own purposes may infringe the rights of the respective entity holding those rights.

RAFI GmbH & Co. KG

Ravensburger Str. 128-134
88276 Berg / Ravensburg
Germany
www.rafi-group.com,
info.headquarters@rafi-group.com