IEC Appliance Inlet C14 with Line Switch 2-pole, Fuseholder 1- or 2-pole







C14

70° C

See below:
Approvals and Compliances

Description

- Panel mount :
  Screw-on from front side
- 3 Functions :
  Appliance Inlet Protection class I , Line Switch 2-pole , Fuseholder for fuse-links 5 x 20 mm 1- or 2-pole
- Quick connect terminals 4.8 x 0.8 mm

Unique Selling Proposition

- V-Lock notch standard
- Meets the requirements of IEC 60335-1 for appliances in unattended use
- Includes the enhanced requirements of glow wire tests acc. to IEC 60695-2-11 or -12 &-13
- Minimal installation height

Characteristics

- Ultra-compact design. Ideal for low profile designs
- All single elements are already wired
- Ideal for application with high transient loads
- Suitable for use in equipment according to IEC/UL 62368-1

Other versions on request

- Solder terminals
- Fuse drawer 1-pole, plus spare fuse case
- Fuse drawer 2-pole, with shorting bar
- Other rocker marking
- Line switch 1-pole
- Protection class II, 70°C

References

Alternative: version with line filter DD12; DD14
Alternative: version for snap-in mounting KM
Alternative: version for PCB mounting DD21

Weblinks

pdf data sheet, html datasheet, General Product Information, Approvals, Distributor-Stock-Check, Accessories, Detailed request for product

Technical Data

Ratings IEC	10 A / 250 VAC; 50 Hz
Ratings UL/CSA	10 A / 250 VAC; 60 Hz
Dielectric Strength	> 2.5 kVAC between L-N > 3 kVAC between L/N-PE (1 min/50 Hz)
Allowable Operation Temperature	-25 °C to 85 °C
IP-Protection	front side IP40 acc. to IEC 60529
Protection against electric shock	Suitable for appliances with protection class I acc. to IEC 61140
Terminal	Quick connect terminals 4.8 x 0.8 mm
Panel Thickness S	Screw-on mounting: max 8 mm Mounting screw torque max 0.5 Nm
Material: Housing	Thermoplastic, black, UL 94V-0

Appliance inlet/-outlet	C14 acc. to IEC 60320-1 UL 60320-1, CSA C22.2 no. 60320-1 (for cold conditions) pin-temperature 70 °C, 10 A, Protection Class I
Fuseholder	1-/2-pole, Shocksafe category PC2 acc. to IEC 60127-6, for fuse-links 5 x 20 mm
Rated Power Acceptance @ Ta 23 °C	5 x 20: 2 W (1 pole)/ 1.6 W (2-pole) per pole
Power Acceptance @ Ta > 23°C	Admissible power acceptance at higher ambient temperature see derating curves
Line Switch	Rocker switch 2-pole, non-illuminated or illuminated, acc. to IEC 61058-1 Technical Details

Approvals and Compliances

Detailed information on product approvals, code requirements, usage instructions and detailed test conditions can be looked up in Details about Approvals

SCHURTER products are designed for use in industrial environments. They have approvals from independent testing bodies according to national and international standards. Products with specific characteristics and requirements such as required in the automotive sector according to IATF 16949, medical technology according to ISO 13485 or in the aerospace industry can be offered exclusively with customer-specific, individual agreements by SCHURTER.

Approvals

The approval mark is used by the testing authorities to certify compliance with the safety requirements placed on electronic products.

Approval Reference Type: DD11

Approval Logo	Certificates	Certification Body	Description
	VDE Approvals	VDE	Certificate Number: 40046933
	UL Approvals	UL	UR File Number: E93617
	CCC Approvals	CCC	CCC Certificate Number: 2018180204007758

Product standards

Product standards that are referenced

Organization	Design	Standard	Description
IEC	Designed according to	IEC 60320-1	Appliance couplers for household and similar general purposes
IEC	Designed according to	IEC 60127-6	Miniature fuses. Part 6. Fuse-holders for miniature fuse-links
IEC	Designed according to	IEC 61058-1	Switches for appliances. Part 1. General requirements
UL	Designed according to	UL 60320-1	Standard for Attachment Plugs and Receptacles
CSA Group	Designed according to	CSA C22.2 no. 60320-1	General Use Receptacles, Attachment Plugs, and Similar Wiring Devices

Application standards

Application standards where the product can be used

Organization	Design	Standard	Description
IEC	Suitable for applications acc.	IEC/UL 62368-1	Audio/video, information and communication technology equipment - Part 1: Safety requirements
IEC	Suitable for applications acc.	IEC 60601-1	Medical electrical equipment - Part 1: General requirements for basic safety and essential performance
IEC	Suitable for applications acc.	IEC 60335-1	Safety of electrical appliances for household and similar purposes. Meets the requirements for appliances in unattended use. This includes the enhanced requirements of glow wire tests acc. to IEC 60695-2-11 or -12 & -13.

Compliances

The product complies with following Guide Lines

Identification	Details	Initiator	Description
CE	CE declaration of conformity	SCHURTER AG	The CE marking declares that the product complies with the applicable requirements laid down in the harmonisation of Community legislation on its affixing in accordance with EU Regulation 765/2008.
UKCA	UKCA declaration of conformity	SCHURTER AG	The UKCA marking declares that the product complies with the applicable requirements laid down in the British Amendment of Regulation (EC) 765/2008.
RoHS	RoHS	SCHURTER AG	Directive RoHS 2011/65/EU, Amendment (EU) 2015/863
	China RoHS	SCHURTER AG	The law SJ / T 11363-2006 (China RoHS) has been in force since 1 March 2007. It is similar to the EU directive RoHS.
REACH	REACH	SCHURTER AG	On 1 June 2007, Regulation (EC) No 1907/2006 on the Registration, Evaluation, Authorization and Restriction of Chemicals 1 (abbreviated as "REACH") entered into force.
V-Lock		SCHURTER AG	V-Lock system are based on a matching plug-dose combination. The connector is equipped with a notch intended for use with the latching cordset. The cord latching system prevents against accidental removal of the cordset.
	White Paper Glow wire test	SCHURTER AG	Meets the requirements of IEC 60335-1 for appliances in unattended use. This includes the enhanced requirements of glow wire tests acc. to IEC 60695-2-11 or -12 &-13.
	Medical Equipment	SCHURTER AG	Suitable for use in medical equipment according to IEC/UL 60601-1 (1 MOOP, 1 MOPP)

Dimensions [mm]
Screw version A

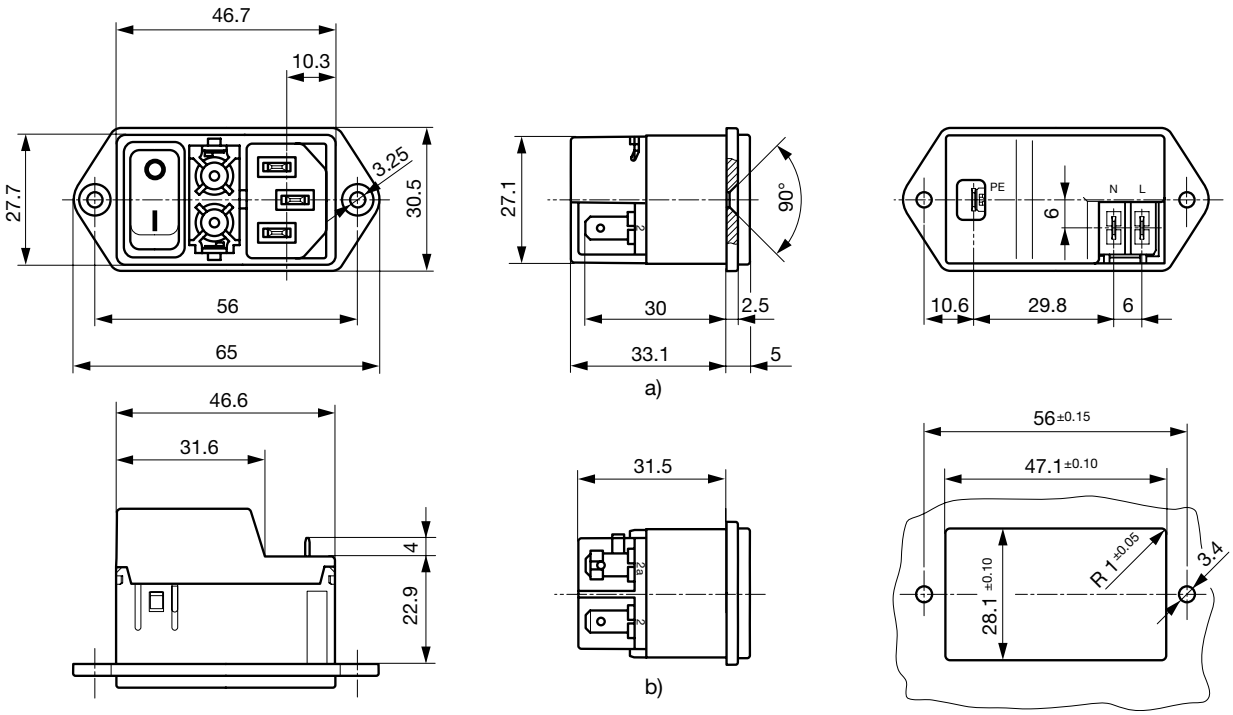

a) view with cover
b) view without cover

Screw version B

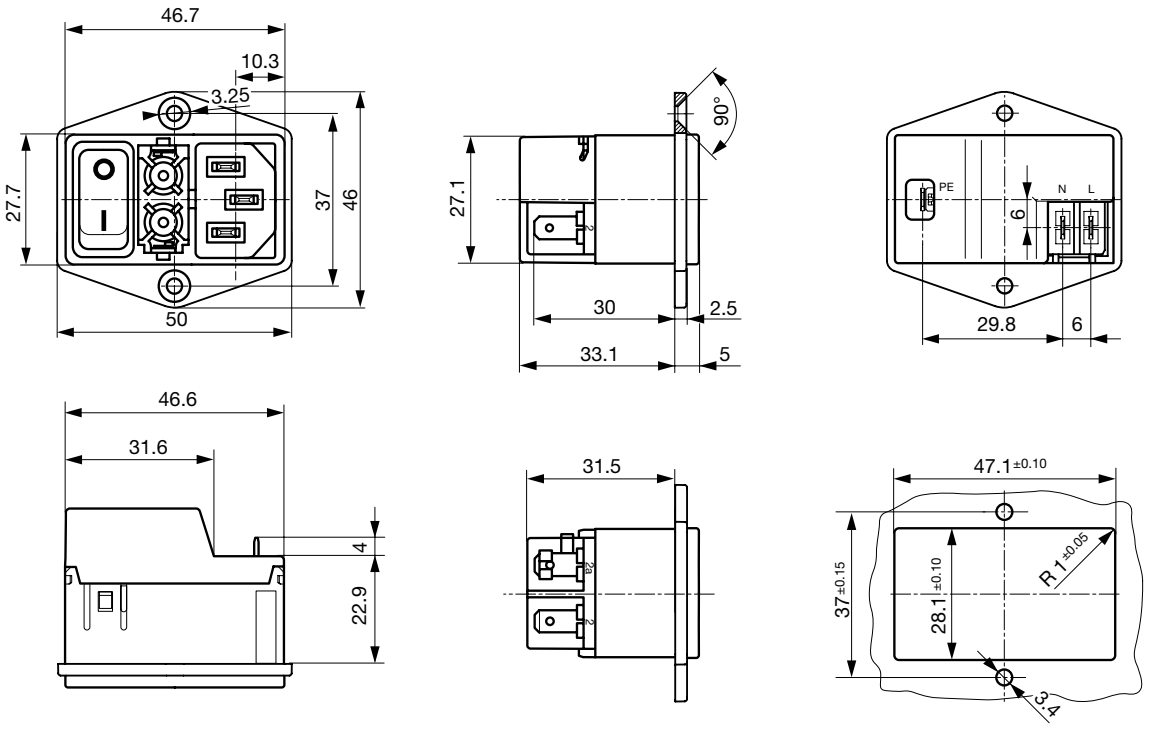

Diagrams

Non-illuminated

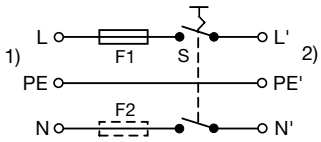

1) Line
2) Load

illuminated

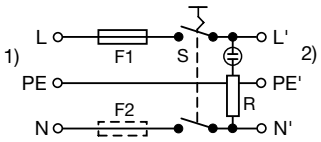

1) Line
2) Load

Derating Curves

1-pole

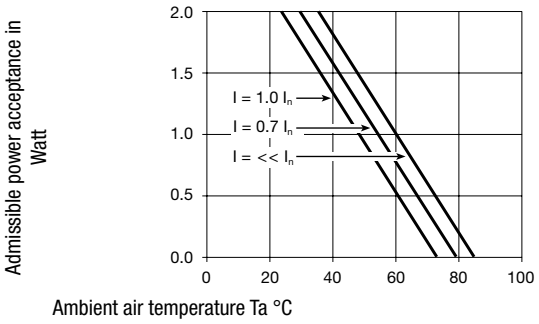

2-pole

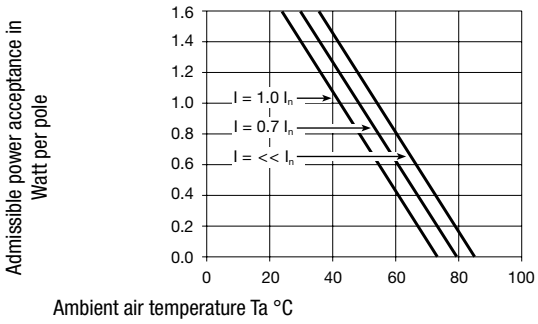

All Variants

Fuseholder	Line Switch	Illumination	Color	Cover	V-Lock	Mounting	Order Number	
1-pole	2-pole	non-illuminated	-		●	A	DD11.0111.1110	
1-pole	2-pole	illuminated	red		●	A	DD11.0113.1110	
1-pole	2-pole	illuminated	green		●	A	DD11.0114.1110	
1-pole	2-pole	illuminated	green		●	B	3-131-462	
2-pole	2-pole	non-illuminated	-		●	A	DD11.0121.1110	
2-pole	2-pole	illuminated	red		●	A	DD11.0123.1110	
2-pole	2-pole	illuminated	green		●	A	DD11.0124.1110	
2-pole	2-pole	non-illuminated	-		●	B	3-131-464	
1-pole	2-pole	non-illuminated	-	●	●	A	DD11.0111.1111	
1-pole	2-pole	illuminated	red	●	●	A	DD11.0113.1111	
1-pole	2-pole	illuminated	green	●	●	A	DD11.0114.1111	
1-pole	2-pole	non-illuminated	-	●	●	B	3-131-451	
1-pole	2-pole	illuminated	green	●	●	B	3-131-463	
2-pole	2-pole	non-illuminated	-	●	●	A	DD11.0121.1111	
2-pole	2-pole	illuminated	red	●	●	A	DD11.0123.1111	
2-pole	2-pole	illuminated	green	●	●	A	DD11.0124.1111	
2-pole	2-pole	non-illuminated	-	●	●	B	3-131-465	
2-pole	2-pole	illuminated	green	●	●	B	3-131-466	

Most Popular.

Availability for all products can be searched real-time:https://www.schurter.com/en/Stock-Check/Stock-Check-SCHURTER

The fuse drawer is not included and must be ordered separately (see required accessory).

Packaging unit 50 Pcs

Required Accessory



Description

Fusedrawer_2
Fusedrawer for Fuse Links 5x20 mm, with or without Voltage Selector Insert

Fingergrip, 2-pole	4301.1401
Extra-Safe, 2-pole	4301.1403
Fingergrip, 1-pole	4301.1405
Extra-Safe, 1-pole	4301.1407
	...

Accessories



Wire_Harness
Wire harness for SCHURTER products



Assorted_Covers
Rear Cover



RC320
Rear Cover for Power Entry Module



Cord_retaining_kits
Cord retaining strain relief

Flat head, A	4700.0001

Mating Outlets/Connectors



Category / Description

Appliance Outlet Overview complete

4787, Mounting: Screw-on mounting, Appliance Outlet: IEC Solder terminals, 10 A, Suitable for appliances with protection class I	4787
4788, Mounting: Snap-in version, Appliance Outlet: IEC Solder / Quick Connect, 10 A, Suitable for appliances with protection class I	4788
IEC Appliance Outlet F or H, Screw-on Mounting, Front Side, Solder, PCB or Quick-connect Terminal	5091



Connector Overview complete

4782 Mounting: Power Cord, 3 x 1 mm² / 3 x 18 AWG, Cable, Connector: IEC C13	4782
4785 Mounting: Power Cord, 3 x 1 mm² / 3 x 18 AWG, Cable, Connector: IEC C13	4785
4300-06 Mounting: Power Cord, 3 x 1 mm² / 3 x 18 AWG, Cable, Connector: IEC C13	4300-06
4781 Mounting: Power Cord, Cable, Connector: IEC C15	4781
4784 Mounting: Power Cord, 3 x 1 mm² / 3 x 18 AWG, Cable, Connector: IEC C15	4784
	...

Mating Outlets/Connectors shuttered



Connector Overview complete

4783 Mounting: Power Cord, 3 x 1 mm² / 3 x 18 AWG, Cable, Connector: IEC C13	4783



Power Cord Overview complete

VAC13KS, Overview, V-Lock cord retaining, diverse Connector IEC C13, diverse, black	VAC13KS
VAC17KS, V-Lock cord retaining, diverse m, Connector IEC C17, diverse, black / grey / white	VAC17KS

22.11.2022

The specifications, descriptions and illustrations indicated in this document are based on current information. All content is subject to modifications and amendments. Information furnished is believed to be accurate and reliable. However, users should independently evaluate the suitability and test each product selected for their own applications.