178 MICROSWITCHES
182 TACTILE SWITCHES
186 22MM CONTROL SWITCHES
191 FOOT SWITCHES
193 LIMIT SWITCHES
203 PIEZO SWITCHES AND KEYPADS

3.5x6mm tactile switches

Product overview

- Compact design
- Advanced switch technology
- Positive tactile action
- Tamper proof application
- Flow solder wash-away cleaning
- Through-hole PCB and surface mount terminals
- Can be supplied taped for auto-insertion, add suffix /T

SPECIFICATION		
Rating	50mA/12VDC	
Contact resistance	100mΩ max	
Insulation strength	100MΩ min/500VDC	
Electrical life	30,000 operations min	
Temperature range	-10°C to +60°C	
Operating force	180GF ± 50GF	
Material	Case Button Contacts	Nylon Nylon Stainless steel silver plated
Terminals	Brass silver plated	

Through-hole PCB terminals

PART NO.	BUTTON HEIGHT
CST35643T	4.3mm
CST35605T	5.0mm

CST356 T



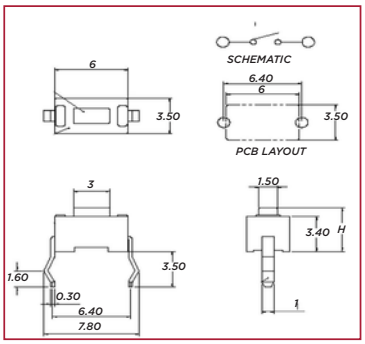

Surface mount terminals

PART NO.	BUTTON HEIGHT
CST35643S	4.3mm
CST35605S	5.0mm

CST356 S



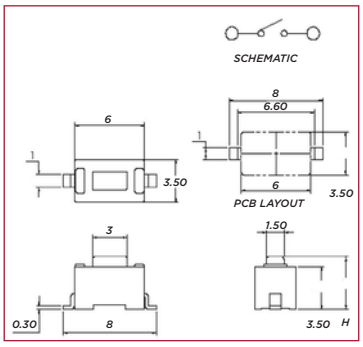

KEY FEATURES

3.5x6mm | Tape and reel option | Kinked pin or surface mount