Signal tower / Terminal elements

Terminal element w. plug KS71/72



Part No.:	**640.000.02**
Series:	**KombiSIGN 71**

MECHANICAL DATA	
Height	36 mm
Diameter	70 mm
Materials	PA-GF PC
Housing colour	Black
Protection category	IP65
Connection	Plug-in connection
Type of fixing	Tube mounting
Working temperature minimum	-20°C
Working temperature maximum	+50°C
Weight with packaging	90 g
Product weight	72 g

ELECTRICAL DATA	
Operating voltage	24V
Operating voltage type	DC
Protection class	Protection class 2
Pollution degree	2

APPROVAL DATA	
Conforms with CE	No
WEEE	No
Conforms with RED directive	No
Conforms with ATEX-directive	No
Conforms with CCC	No
Conforms with UL	No
Conforms with FCC	No
Conforms with IC	No
EAC certificate available	No
Conforms with AS-I	No
Conforms with DNV	No
Conforms with RoHS CN	No
Conforms with VdS	No

! For additional installation and mounting information, refer to the appropriate user guide at www.werma.com. This printed copy is for information only and is subject to alteration.

Signal tower / Terminal elements

Terminal element w. plug KS71/72

DRAWING

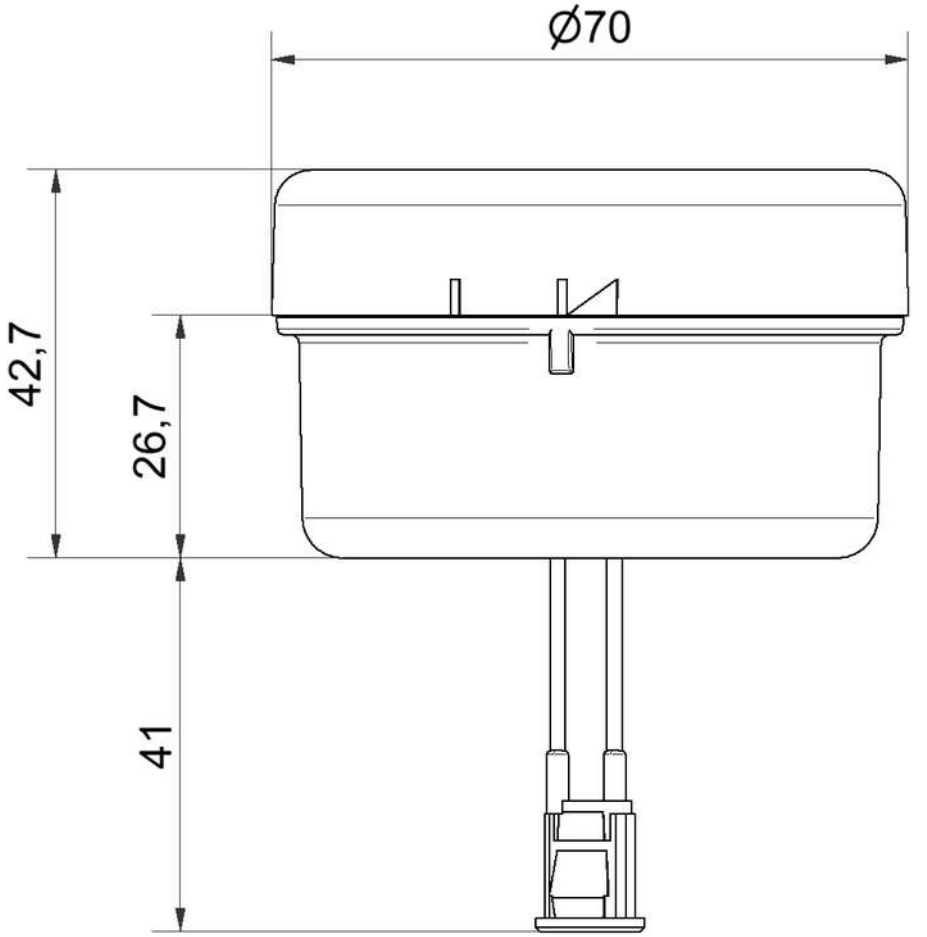

! For additional installation and mounting information, refer to the appropriate user guide at www.werma.com. This printed copy is for information only and is subject to alteration.