E/P pressure regulator, Series ED02

R414003365

- Compact design
- High control precision and dynamics
- Suitable for a variety of applications
- Manifold together with no additional base plate

Series ED02

The AVENTICS ED02 direct-acting pressure control valve ensures sensitive pressure control by combining digital control electronics with innovative proportional technology. The robust poppet valve technology, a large opening cross-section and the use of a soft-sealing valve seat make the valve highly resistant to contamination.



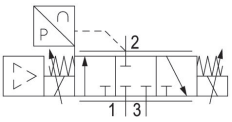

Technical data

Type	Current control with actual output value
Control	Directly controlled
Control	Analog
Function	Air exhaust
Output signal	Analog
Operational voltage DC	24 V
Max. current consumption	300 mA
Actual output value	4 ... 20 mA
Nominal input value	4 ... 20 mA
Min. regulation range	0 bar
Max. regulation range	1 bar
Min. working pressure	0.5 bar
Max. working pressure	3 bar
Hysteresis	< 0,01 bar
Medium	Compressed air
Nominal flow Qn	120 l/min
Min. ambient temperature	0 °C
Max. ambient temperature	50 °C
Min. medium temperature	0 °C

E/P pressure regulator, Series ED02

R414003365

Max. medium temperature	50 °C
Protection class	IP65
Permissible ripple	5%
Max. particle size	50 µm
Max. oil content of compressed air	1 mg/m³
Type	Poppet valve
Mounting orientation	±α = 0 ... 90° ±β = 0 ... 90°
Certificates	CE declaration of conformity
Compressed air connection input	G 1/8 1/8 NPT
Compressed air connection output	G 1/8 1/8 NPT
Electrical connection size	via signal connection
Signal connection	input and output
Signal connection	Plug
Signal connection	M12
Signal connection	5-pin
Industry	Industrial
Weight	0.32 kg

Material

Housing material	Die-cast aluminum Steel, chrome-plated
Seal material	Hydrogenated acrylonitrile butadiene rubber
Part No.	R414003365

Technical information

With oil-free, dry air, other installation positions are possible on request.

ED02 series valves can be assembled into blocks using tie rods (see accessories).

The protection class is only ensured when the plug is mounted properly. For detailed information, see operating instructions.

The compressed air connection threads fit both G 1/8 and 1/8 NPTF.

The min. control pressure must be adhered to, since otherwise faulty switching and valve failure may result!

The pressure dew point must be at least 15 °C less than ambient and medium temperature and may not exceed 3 °C.

The oil content of compressed air must remain constant during the life cycle.

Use only the approved oils from AVENTICS. Further information can be found in the “Technical information” document (available in https://www.emerson.com/en-us/support).

Dimensions

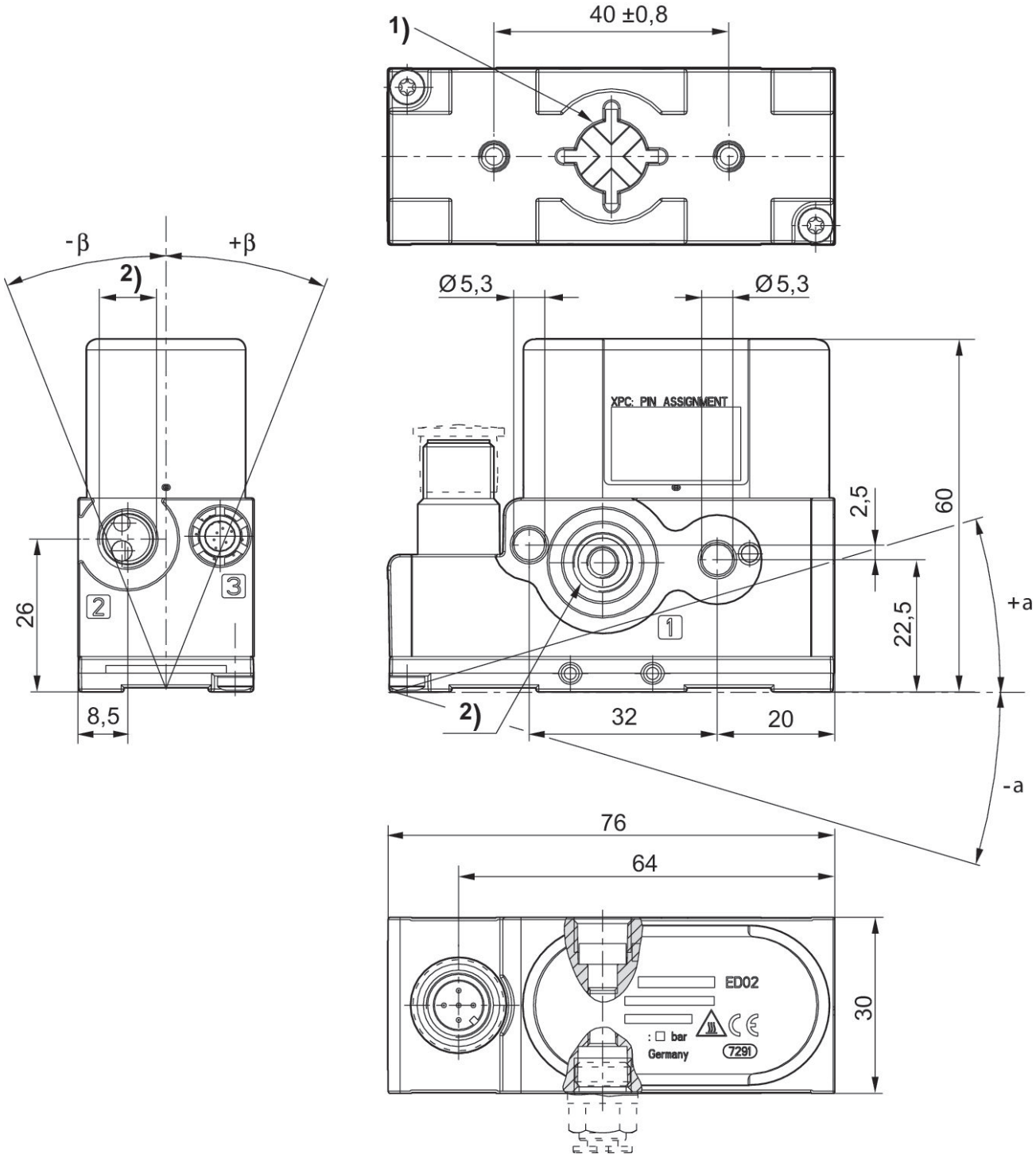

1) Housing exhaust
2) Universal threaded connection, suitable for G1/8 according to ISO 228/1:2000 and 1/8-27 NPTF

Functional diagram

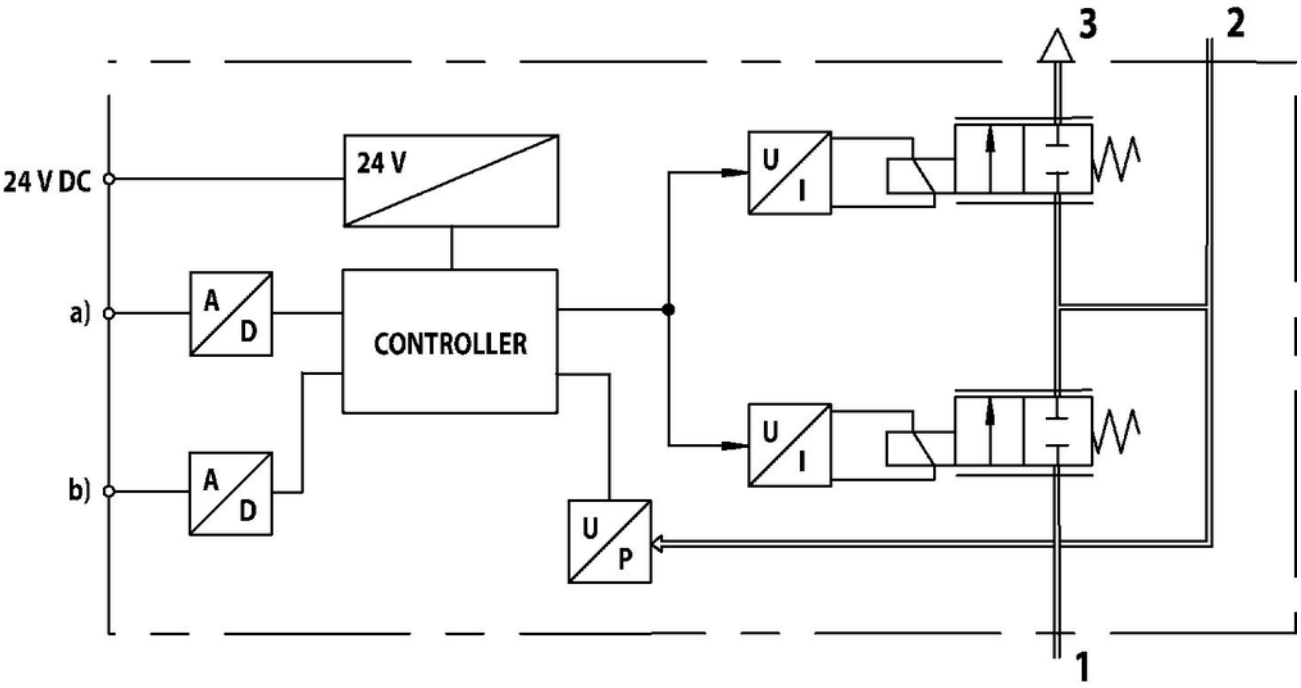

a) Nominal input value b) Actual output value The E/P pressure control valve modulates the pressure corresponding to an analog electrical nominal input value.
1) Operating pressure
2) Working pressure
3) Exhaust

Characteristic and pin assignment for current control with actual output value

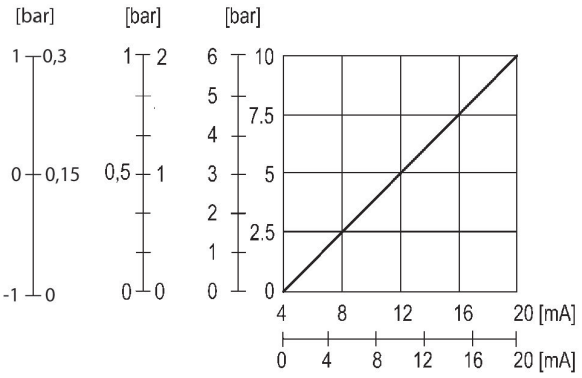

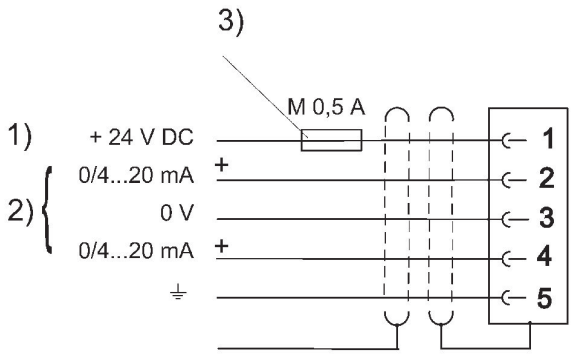

1) Supply Voltage 2) Actual value (pin 4) and nominal value (pin 2) are related to 0 V. Current control (ohmic load 100 Ω). Actual value output (max. total resistance of downstream devices < 500 Ω). 3) The operating voltage must be protected by an external M 0.5 A fuse. Connect the plug via a shielded cable to ensure EMC.

Flow diagram for pressure range up to 2 bar

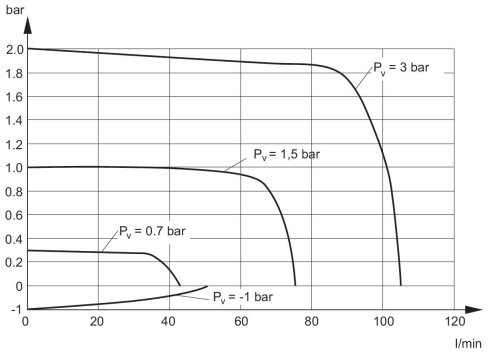

Pv = Supply pressure

Durchflussdiagramm für Druckbereich bis 10 bar

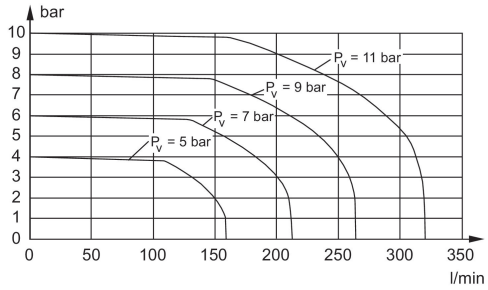

Pv = Supply pressure