- Square, round and half-ellipse shaped caps
- Rounded top surface
- Option to have it panel sealed
  - IP67 = 5G+1TS+1TW
  - IP67 = 5G+1US+1UW
  - IP65 = 5G+1VS+1VW
- 10.6 mm x 10.6 mm; Ø10.6 mm; 10.6 mm x 13.25 mm
- h =14.9 mm
- Material: ABS/polycarbonate (cap); silicone rubber (sealing)
- Temp. Range:
  - Solid cap: -40/+65°C
  - Transparent cap: -40/+85°C
  - Sealing:
- Panel cut-out: 1TS-11.0 x 11.0, 1US-Ø11.0, 1VS-11.0 x 13.65

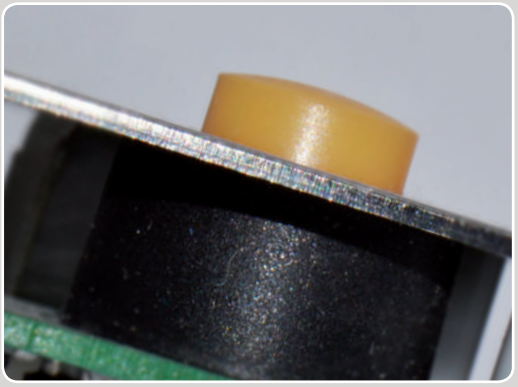

All dimensions in mm

DIMENSIONS

TH + 1TS+1TW

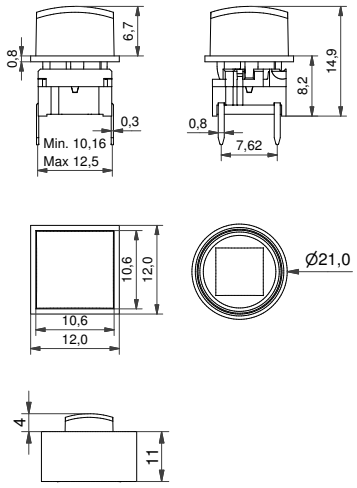

TH w/LED + 1US+1UW

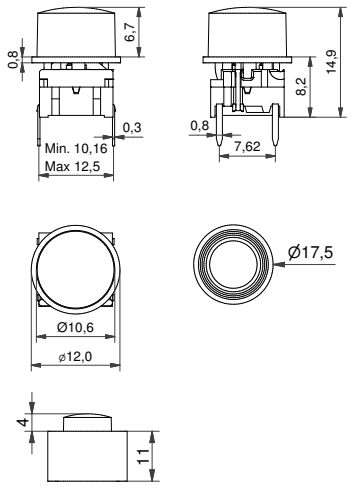

SMD + 1VS+ 1VW

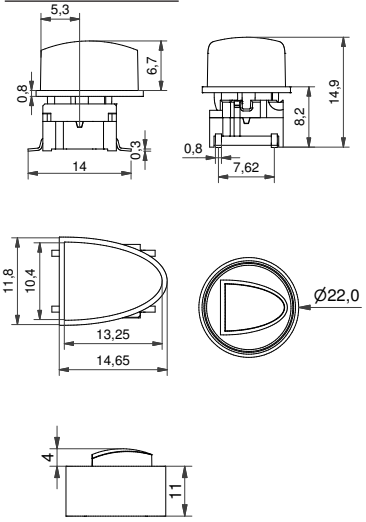

PANEL CUT-OUT

Recommended

1TS - 11x11 mm
1US - Ø11 mm
1VS

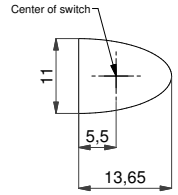

*mathematical shape of half-ellipse

Distance between PCB and front panel

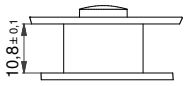

ILLUMINATED – HOW TO ORDER

Switch: **5 G**

Mounting:
- **TH9** through-hole
- **SH9** surface mount

Actuation force:
- **20**
- **35**
- **65**
- **Q***

LED:
- **01** blue
- **22** green
- **42** yellow
- **61** white
- **82** red
- **2242** green/yellow
- **8222** red/green
- **8242** red/yellow

Cap:
- **1TS**
- **1VS**
- **1US**

Colour code:
- **16** frosted white

Sealing:
- **1TW**
- **1VW**
- **1UW**

*For an illuminated quiet 2.0N switch add Q to the end of the switch part number.

NON-ILLUMINATED– HOW TO ORDER

Switch: **5 G**

Mounting:
- **TH9** through-hole
- **SH9** surface mount

Actuation force:
- **20**
- **20Q**
- **35**
- **65**

Cap:
- **1TS**
- **1VS**
- **1US**

Colour code:
- **00** blue
- **03** grey
- **08** red
- **09** black

Sealing:
- **1TW**
- **1VW**
- **1UW**

Ordering example:
5GSH935 + 1TS03 + 1TW without illumination OR 5GTH96542 + 1US16 + 1UW with illumination OR *5GTH92082Q (illuminated quiet version)
Please see colour codes, updates of products and changes of specifications on www.mec.dk