SOLENOID VALVES

pilot operated
built-in pilot, floating diaphragm
3/8 to 2

NC 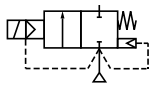

NO 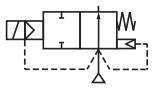

2/2
Series
238



C

FEATURES

- *Minimum operating pressure differential ΔP 0,3/0,5 bar*
- *Two way valves for automatic control of water, air and inert gas and other gases/liquids compatible with the sealing materials used*
- *Interchangeability of magnetic heads, AC and DC*
- *The solenoid valves satisfy all relevant EC Directives*

GENERAL

Differential pressure	See «SPECIFICATIONS» [1 bar =100 kPa]						
Ambient temperature range	-10°C to +60°C						
Maximum viscosity	40 cSt (mm²/s)						
Response time	3/8	1/2	3/4	1	1 1/4	1 1/2	2
opening time (ms)	25	30	55	70	300	300	1500
closing time (ms)	40	90	110	200	1000	1000	2000

fluids (∗)	temperature range (TS)	seal materials (∗)
DN ≤ 25: air, inert gas and water DN > 25: air and water	- 10°C to + 85°C	NBR (nitrile) FPM (fluoroelastomer)

MATERIALS IN CONTACT WITH FLUID

(∗) Ensure that the compatibility of the fluids in contact with the materials is verified

Body	Brass
Internal parts	Stainless steel and brass
Springs	Stainless steel
Diaphragm & disc valve	NBR
Seals & disc pilot	FPM (3/8 to 1), NBR (1 1/4 to 2)
Shading coil	Copper

ELECTRICAL CHARACTERISTICS

Coil insulation class	F
Connector	Spade plug
Connector specification	
for power coil 4W/5,5W	DIN 43650, 11 mm, industry standard B (cable Ø 6-8 mm)
for power coil 3,5W/7W-8W/9W	ISO 4400 / EN 175301-803, form A (Ø 6-10 mm)
Electrical safety	IEC 335
Electrical enclosure protection	Moulded IP65 (EN 60529)
Standard voltages	DC (=) : 24V - 48V
(Other voltages and 60 Hz on request)	AC (~) : 24V - 48V - 115V - 230V / 50 Hz

prefix option	power ratings inrush ~ (VA)	holding ~ (VA)	holding ~ (W)	hot/cold = (W)	operator ambient temperature range (TS) (C°)	replacement coil ~ 230 V/50 Hz	replacement coil = 24 V DC	type [1]
SC	12	6	4	4,5/5,5	-10 to + 60	43005429	43005413	01 [2]
	10,4	6	3,5	5/7	-10 to + 60	43005539	43005533	02
	23	14	8	7,5/9	-10 to + 50	43005275	43005272	03

[1] Refer to the dimensional drawings on the following page. [2] UL/CSA certified.

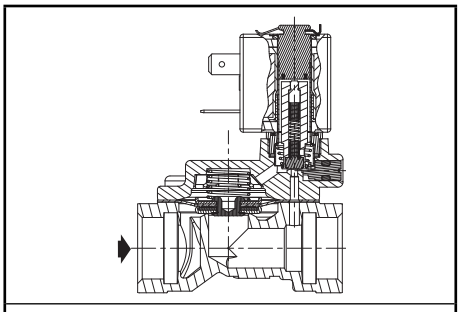

NC function

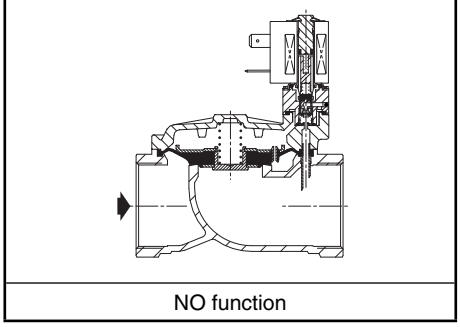

NO function

SPECIFICATIONS

pipe size	orifice size	flow coefficient Kv		operating pressure differential (bar) min.	max. (PS) air / water (∗) ~	max. (PS) air / water (∗) =	power coil (W) ~	power coil (W) =	catalogue number	options maintained man. operator	options FPM	options EPDM
	(mm)	(m³/h)	(l/min)						~/=			
NC - Normally closed												
G* 3/8	12	2,4	40	0,3	10	10	4	5,5	**SCE238C001**	**MO**	**V**	**E**
					16	16	3,5	7	**SCE238C006**	**MO**	**V**	**E**
G* 1/2	12	2,4	40	0,3	10	10	4	5,5	**SCE238C002**	**MO**	**V**	**E**
					16	16	3,5	7	**SCE238C007**	**MO**	**V**	**E**
	15	4,2	70	0,3	10	10	4	5,5	**SCE238C003**	**MO**	**V**	**E**
					16	16	3,5	7	**SCE238C008**	**MO**	**V**	**E**
G* 3/4	20	6,6	110	0,3	10	10	4	5,5	**SCE238C004**	**MO**	**V**	**E**
					16	16	3,5	7	**SCE238C009**	**MO**	**V**	**E**
G* 1	25	9,9	165	0,3	10	10	4	5,5	**SCE238C005**	**MO**	**V**	**E**
					16	16	3,5	7	**SCE238C010**	**MO**	**V**	**E**
G 1 1/4	30	15	250	0,5	10	10	8	9	**SCG238C016**	**MO**	**V**	**-**
G 1 1/2	45	27	450	0,5	10	10	8	9	**SCG238C017**	**MO**	**V**	**-**
G 2	45	34	566	0,5	10	10	8	9	**SCG238C018**	**MO**	**V**	**-**
NO - Normally open												
G 1 1/4	30	15	250	0,5	10	10	8	9	**SCG238C019**	**-**	**V**	**-**
G 1 1/2	45	27	450	0,5	10	10	8	9	**SCG238C020**	**-**	**V**	**-**
G 2	45	34	566	0,5	10	10	8	9	**SCG238C021**	**-**	**V**	**-**

00041GB-2009/R03
Availability, design and specifications are subject to change without notice. All rights reserved.

OPTIONS

- Valves can also be supplied with FPM (fluorelastomer), EPDM (ethylene-propylene) seals, diaphragm and disc. Use the appropriate optional suffix letter for identification
- Explosionproof enclosures for use in zones 1/21-2/22, categories 2-3 to ATEX Directive 94/9/EC (see "Explosionproof solenoids" section)
- Oxygen service, suffix NV, example: SCE238C002NVMO (Except pipe size G 1 1/4, G 1 1/2 and G 2)
- Plug with visual indication and peak voltage suppression or with cable length of 2 m (see Solenoids, Coils & Accessories section)

INSTALLATION

- The solenoid valves can be mounted in any position without affecting operation
- Pipe connections (G*) have standard combination thread according to ISO 228/1 and ISO 7/1. Pipe connections (G) have standard combination thread according to ISO 228/1
- Installation/maintenance instructions are included with each valve

SPARE PARTS KIT

catalogue number	spare parts kit no. (1)	
		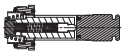
	~/=	~/=
SCE238C001/002/006/007	**C131600**	**C140262V**
SCE238C003/C008	**C131618**	**C140262V**
SCE238C004/C009	**C131606**	**C140262V**
SCE238C005/C010	**C131609**	**C140262V**

(1) Standard suffixes are also applicable to kits.

ORDERING EXAMPLES:

SC	E	238 **C** 001		230V / 50 Hz
SC	E	238 **C** 008	**V**	115V / 50 Hz
SC	E	238 **C** 004	**E**	24V / DC
SC	G	238 **C** 016		230V / 50 Hz

prefix — pipe thread — basic number — voltage — suffix

ORDERING EXAMPLES KITS:

C131600(1)	
C131618	**V**
C140262	**E**

basic number — suffix

DIMENSIONS (mm), WEIGHT (kg)



TYPE 01
Prefix "SC" Solenoid
IEC 335 / DIN 43650
IP65

SCE238C001/002/004/005
SCE238C003



TYPE 02
Prefix "SC" Solenoid
IEC 335 / ISO 4400
IP65

SCE238C006/007/009/010
SCE238C008



TYPE 03
Prefix "SC" Solenoid
IEC 335 / ISO 4400
IP65

SCG238C016/017/018
SCG238C019/020/021

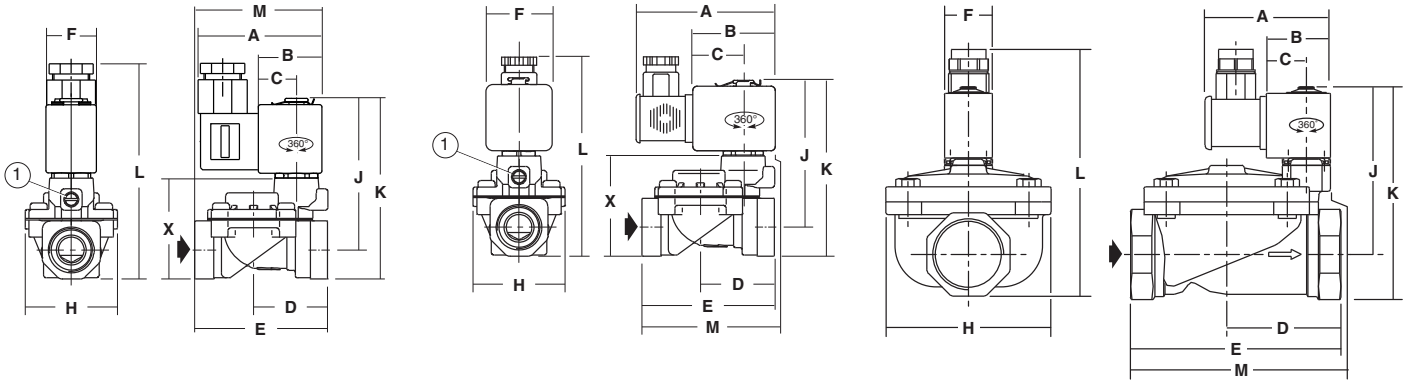

type	prefix option	catalogue number	A	B	C	D	E	F	H	J	K	L	M	X	weight (2)
01	SC	SCE238C001/002	57,5	27,5	17	34,5	62	22	43	68,5	81	98	57,5	47	0,4
		SCE238C003	57,5	27,5	17	45,5	81,5	22	57	71	83,5	100	73,5	49,5	0,5
		SCE238C004	57,5	27,5	17	53	95	22	68	79,5	94,5	111	85,5	60,5	0,8
		SCE238C005	57,5	27,5	17	58	105,5	22	87	84,5	104	121	93	70	1,0
02	SC	SCE238C006/007	73	38	23	34,5	62	30	43	69,5	83	100,5	61,5	47	0,5
		SCE238C008	73	38	23	45,5	81,5	30	57	72	85,5	103	77,5	49,5	0,6
		SCE238C009	73	38	23	53	95	30	68	80,5	96,5	114	89,5	60,5	0,9
		SCE238C010	73	38	23	58	105,5	30	87	85,5	106	123,5	97	70	1,1
03	SC	SCG238C016	73	41,5	21,6	63	113	32	81	109(3)	135(3)	150	106	-	1,7
		SCG238C017	73	41,5	21,6	80	140	32	110	112(3)	142(3)	157	129	-	2,6
		SCG238C018	73	41,5	21,6	85	157	32	110	117(3)	153(3)	168	129	-	2,9
		SCG238C019	73	41,5	21,6	63	113	32	81	127	153	168	106	-	1,9
		SCG238C020	73	41,5	21,6	80	140	32	110	130	160	175	129	-	3,0
		SCG238C021	73	41,5	21,6	85	157	32	110	135	171	186	129	-	3,4

(1) Manual operator location

(2) Incl. coil(s) and connector(s).

(3) Maintained manual operator: added + 23 mm.

00041GB-2009/R04
Availability, design and specifications are subject to change without notice. All rights reserved.