Heavy-Duty / Flash/Multi-Tone Sounder 442

# Flash/Sounder WM 42 tne 115-230VAC GY/YE



**Part No.: 442.130.68**

| MECHANICAL DATA | |
|---|---|
| Length | 211 mm |
| Width | 168 mm |
| Height | 155 mm |
| Materials | PC/ABS |
| Dome colour | Yellow |
| Housing colour | Grey |
| Protection category | IP66 |
| Connection | Screw terminals |
| cross-sectional area minimum | 0,25mm² / 24AWG |
| cross-sectional area maximum | 1,50mm² / 16AWG |
| Cable entry | Screwed cable gland |
| Cable entry minimum | d = 8 mm |
| Cable entry maximum | d = 12 mm |
| Tension relief | Present (conforms to VDE) |
| Type of fixing | Wall mounting |
| Working temperature minimum | -25°C |
| Working temperature maximum | +75°C |
| Weight with packaging | 2350 g |
| Product weight | 2200 g |

| ELECTRICAL DATA | |
|---|---|
| Operating voltage | 115-230V |
| Operating voltage type | AC |
| Operating voltage frequency | 50Hz at 230V<br>60Hz at 115V |
| Operating voltage tolerance | +/- 10% |
| Rated operational voltage | 230 VAC |
| Rated operational current | 80 mA |
| Protection class | Protection class 2 |
| Pollution degree | 3 |
| Overvoltage category | II |
| Isolation voltage | Ui = 250V; Uimp = 2.500V |

| OPTICAL DATA | |
|---|---|
| Light source | Xenon |
| Light colour | Yellow |
| Optical signal image | Flash |
| Flash frequency | 2 Hz |
| Flash output | 3.5 J |

! For additional installation and mounting information, refer to the appropriate user guide at www.werma.com. This printed copy is for information only and is subject to alteration.

Heavy-Duty / Flash/Multi-Tone Sounder 442

# Flash/Sounder WM 42 tne 115-230VAC GY/YE

| | |
|---|---|
| Blink frequency (Hz) | 2 Hz |
| Service life optical | 50,000 h maximum |

| **ACUSTICAL DATA** | |
|---|---|
| Volume (max) at 1m distance | 120,0 dB (A) |
| Acoustic signal image | Multi-tone |
| Number of tones | 42 tone |
| Acoustic service life | 5,000 h minimum |

| **APPROVAL DATA** | |
|---|---|
| Conforms with CE | Yes |
| WEEE | No |
| Conforms with ATEX-directive | No |
| Conforms with CCC | No |
| Conforms with UL | No |
| Conforms with FCC | No |
| Conforms with IC | No |
| EAC certificate available | Yes |
| Conforms with AS-I | No |
| ICAO Certification | No |
| Conforms with DNV | No |
| Conforms with RoHS CN | No |
| Conforms with VdS | No |

! For additional installation and mounting information, refer to the appropriate user guide at www.werma.com. This printed copy is for information only and is subject to alteration.

Heavy-Duty / Flash/Multi-Tone Sounder 442

# Flash/Sounder WM 42 tne 115-230VAC GY/YE

**DRAWING**

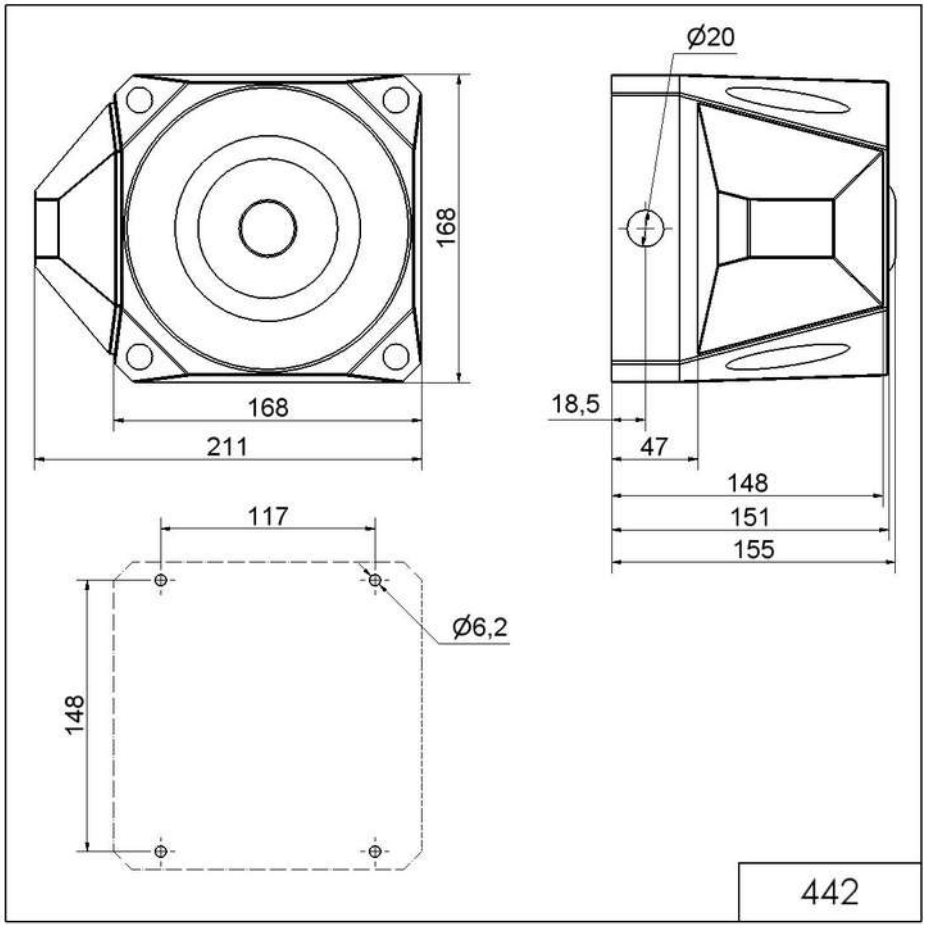


! For additional installation and mounting information, refer to the appropriate user guide at www.werma.com. This printed copy is for information only and is subject to alteration.