RMU400

Absolute multiturn encoder as 24 bit version

RMU06SVU81212bSSI

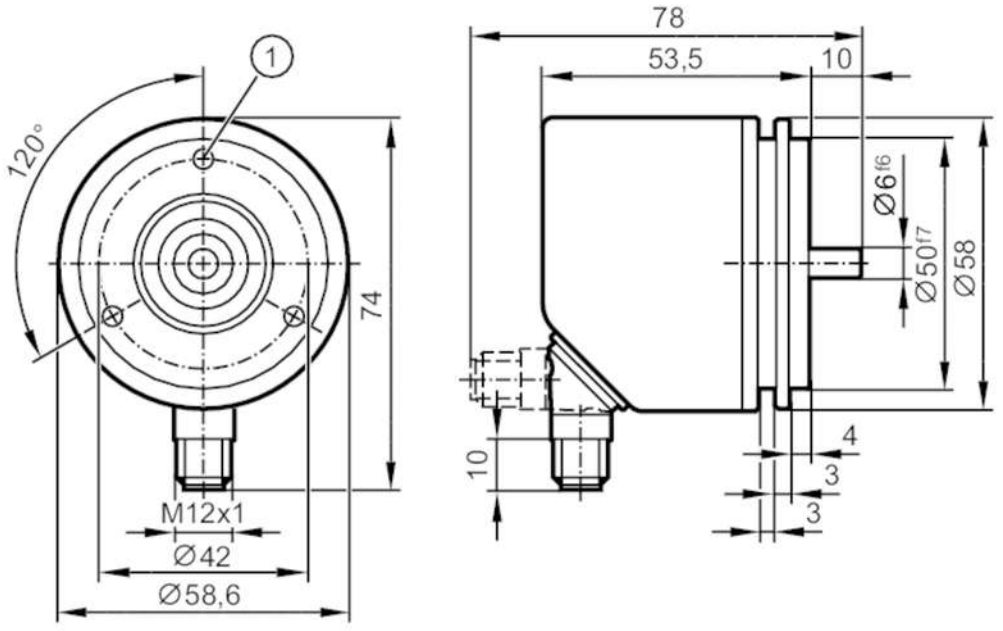

1 M4 x 0.7 Depth 6 mm

Product characteristics		
Resolution		4096 steps; 4096 revolutions
Communication interface		SSI data interface
Shaft design		solid shaft
Shaft diameter	[mm]	6
Application		
Function principle		absolute
Detection system		magnetic
Electrical data		
Operating voltage	[V]	4.5...30 DC
Protection class		III
Reverse polarity protection		yes
Max. power-on delay time	[ms]	500
Settling time	[ms]	32
Max. revolution electrical	[U/min]	12000
Outputs		
Short-circuit protection		yes
Code		Gray code; (increasing code values when turned clockwise (seen on the shaft))
Code signal		Clock input; TTL-compatible signals; clock and clock (inv.) from drivers to RS 422; data output; synchronous serial; TTL-compatible signals, data, and data (inv.)
Measuring/setting range		
Resolution		4096 steps; 4096 revolutions
Accuracy / deviations		
Accuracy		±0.1 INL

RMU400

Absolute multiturn encoder as 24 bit version

RMU06SVU81212bSSI

Software / programming			
Parameter setting options		zero point; direction of rotation	
Interfaces			
Communication interface		SSI data interface	
Operating conditions			
Ambient temperature	[°C]	-40...85	
Storage temperature	[°C]	-40...85	
Max. relative air humidity	[%]	95; (condensation not permissible)	
Protection		IP 65; (on the housing: IP67)	
Tests / approvals			
Shock resistance		EN 60068-2-27	100 g half-sine / 6 ms
Vibration resistance		EN 60068-2-29	10 g half-sine / 16 ms
MTTF	[years]	350	
Mechanical data			
Weight	[g]	348.1	
Dimensions	[mm]	Ø 58.6 / L = 63.5	
Materials		flange: aluminium; housing: stainless steel (444/1.4521)	
Max. revolution, mechanical	[U/min]	12000	
Max. starting torque	[Nm]	1	
Reference temperature torque	[°C]	20	
Shaft design		solid shaft	
Shaft diameter	[mm]	6	
Shaft material		stainless steel	
Max. shaft load axial (at the shaft end)	[N]	40	
Max. shaft load radial (at the shaft end)	[N]	60	
Fixing flange		synchro-flange	

RMU400

Absolute multiturn encoder as 24 bit version

RMU06SVU81212bSSI

Electrical connection - plug

Connector: 1 x M12, radial, can also be used axially; coding: A; Moulded body: stainless steel (316 / 1.4401); Maximum cable length: 100 m



1	L+
2	clock
3	L-
4	clock (inv.)
5	data
6	data (inv.)
7	reset to zero
8	reversal of direction of rotation
	Screen plug

Diagrams and graphs

Pulse diagram

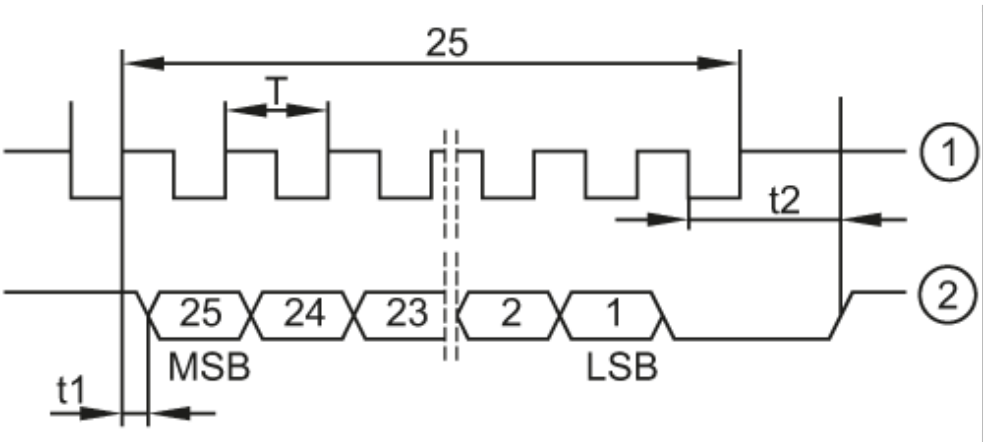

1 clock

2 data