8EAC0122.001-1

1 General information

Resolver plug-in module 8EAC0122.001-1 can be used in the slot of an ACOPOS P3 8EI servo drive. The module contains a resolver interface for evaluating BRX resolvers.

The plug-in module evaluates the output from resolvers that are either built into B&R servo motors or used to evaluate external axes. These resolvers return the absolute position over one revolution. The travel path is normally longer than one revolution. In this case, a reference switch must be used and a homing procedure carried out.

The encoder input signals are monitored. This makes it possible to detect open circuits, short circuits and failures of the encoder power supply (reference signal).

After it is switched on, the plug-in module is automatically identified by the operating system on the ACOPOS P3 8EI servo drive.

Information:

The encoder interfaces of 8EAC plug-in modules are each permanently assigned to an axis (motor connection X5xx) of the 8EI servo amplifier in which the respective 8EAC plug-in module is being operated.

8EAC encoder interface plug-in module	Assignment		
	8EIxxxxxS... 1-axis modules	8EIxxxxxD... 2-axis modules	8EIxxxxxT... 3-axis modules
X41x	X51 / X51A	X51 / X51A	X51 / X51A
X42x	---	X52	X52
X43x	---	---	X53

2 Order data

Order number	Short description	Figure
	Plug-in modules	
8EAC0122.001-1	ACOPOS P3 plug-in module, resolver interface 10 kHz	
	Optional accessories	
	Resolver cables	
8ECR0005.1111C-0	ACOPOS P3 resolver cable, length 5 m, 3x 2x 24 AWG (19x 0.127), 12-pin female speedtec connector, 8-pin male Mini I/O connector, can be used in cable drag chains	
8ECR0007.1111C-0	ACOPOS P3 resolver cable, length 7 m, 3x 2x 24 AWG (19x 0.127), 12-pin female speedtec connector, 8-pin male Mini I/O connector, can be used in cable drag chains	
8ECR0008.1111C-0	ACOPOS P3 resolver cable, length 8 m, 3x 2x 24 AWG (19x 0.127), 12-pin female speedtec connector, 8-pin male Mini I/O connector, can be used in cable drag chains	
8ECR0009.1111C-0	ACOPOS P3 resolver cable, length 9 m, 3x 2x 24 AWG (19x 0.127), 12-pin female speedtec connector, 8-pin male Mini I/O connector, can be used in cable drag chains	
8ECR0010.1111C-0	ACOPOS P3 resolver cable, length 10 m, 3x 2x 24 AWG (19x 0.127), 12-pin female speedtec connector, 8-pin male Mini I/O connector, can be used in cable drag chains	
8ECR0012.1111C-0	ACOPOS P3 resolver cable, length 12 m, 3x 2x 24 AWG (19x 0.127), 12-pin female speedtec connector, 8-pin male Mini I/O connector, can be used in cable drag chains	
8ECR0015.1111C-0	ACOPOS P3 resolver cable, length 15 m, 3x 2x 24 AWG (19x 0.127), 12-pin female speedtec connector, 8-pin male Mini I/O connector, can be used in cable drag chains	
8ECR0020.1111C-0	ACOPOS P3 resolver cable, length 20 m, 3x 2x 24 AWG (19x 0.127), 12-pin female speedtec connector, 8-pin male Mini I/O connector, can be used in cable drag chains	
8ECR0025.1111C-0	ACOPOS P3 resolver cable, length 25 m, 3x 2x 24 AWG (19x 0.127), 12-pin female speedtec connector, 8-pin male Mini I/O connector, can be used in cable drag chains	

Table 1: 8EAC0122.001-1 - Order data

3 Technical data

Order number	8EAC0122.001-1
General information	
Module type	ACOPOS P3 plug-in module
B&R ID code	0xEA8E
Max. power consumption	1 W
Certifications	
CE	Yes
UKCA	Yes
UL	cULus E225616 Power conversion equipment
KC	Yes
Encoder connection	
Module-side connection [1)]	8-pin female Mini I/O connector
Status indicators	None
Encoder monitoring	Yes
Max. encoder cable length	100 m
Encoder power supply	
Output voltage	Typ. 3 V_{eff}
Output current	Max. 50 mA_{eff}
Frequency	10 kHz
Protective measures	
Overload-proof	Yes
Short-circuit proof	Yes
Position	
Resolution @ 1 V_{SS}	Number of pole pairs * 16 bits
Analog inputs	
Digital converter resolution	16-bit
Input impedance	10.4 kΩ - j8 kΩ
Input voltage	Resolver transformation ratio: 0.2 - 0.55 ±10%
Common-mode voltage	Max. ±12 V
Signal transmission	Differential signals
Support	
Motion system	
mapp Motion	5.00.0 and higher
ACP10/ARNC0	3.11.0 and higher
Ambient conditions	
Temperature	
Operation	
Nominal	5 to 40°C
Maximum	55°C
Storage	-25 to 55°C
Transport	-25 to 70°C
Relative humidity	
Operation	5 to 85%
Storage	5 to 95%
Transport	Max. 95% at 40°C
Mechanical properties	
Dimensions	
Width	24 mm
Height	82 mm
Depth	103 mm
Weight	123 g

Table 2: 8EAC0122.001-1 - Technical data

1) The resolver must be wired using a cable with a single shield and twisted pair signal lines.

4 Wiring

4.1 Pinout

Information:

Plug-in module 8EAC is not capable of hot plugging. An 8EAC plug-in module is only permitted to be connected to or disconnected from an ACOPOS P3 8EI servo drive when power to the servo drive is switched off.

Figure	Mini I/O X41A	Pin	Name [1]	Function	Typical wire colors for the resolver [2]
	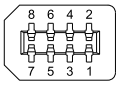	1	S2	Sine input -	Yellow
		2	R2	Reference output +	Black/White (or yellow/white)
		3	S4	Sine input +	Blue
		4	R1	Reference output -	Red/White
		5	S3	Cosine input +	Black
		6	T1	Temperature sensor +	---
		7	S1	Cosine input -	Red
		8	T2	Temperature sensor -	---

Table 3: Resolver interface 8EAC0122.001-1 - Pinout

1) Names are the same as those used by leading manufacturers (Tamagawa, Tyco, LTN).
2) This refers to the wire colors of the lines connected directly to the resolver that are used universally by leading manufacturers (Tamagawa, Tyco, LTN). **These are not the wire colors in B&R resolver cables!**

Danger!

The connections for the motor temperature sensor and encoder are safely isolated circuits. These connections are therefore only permitted to be connected to devices or components that have sufficient isolation per IEC 60364-4-41 or EN 61800-5-1.

5 Input/Output circuit diagram

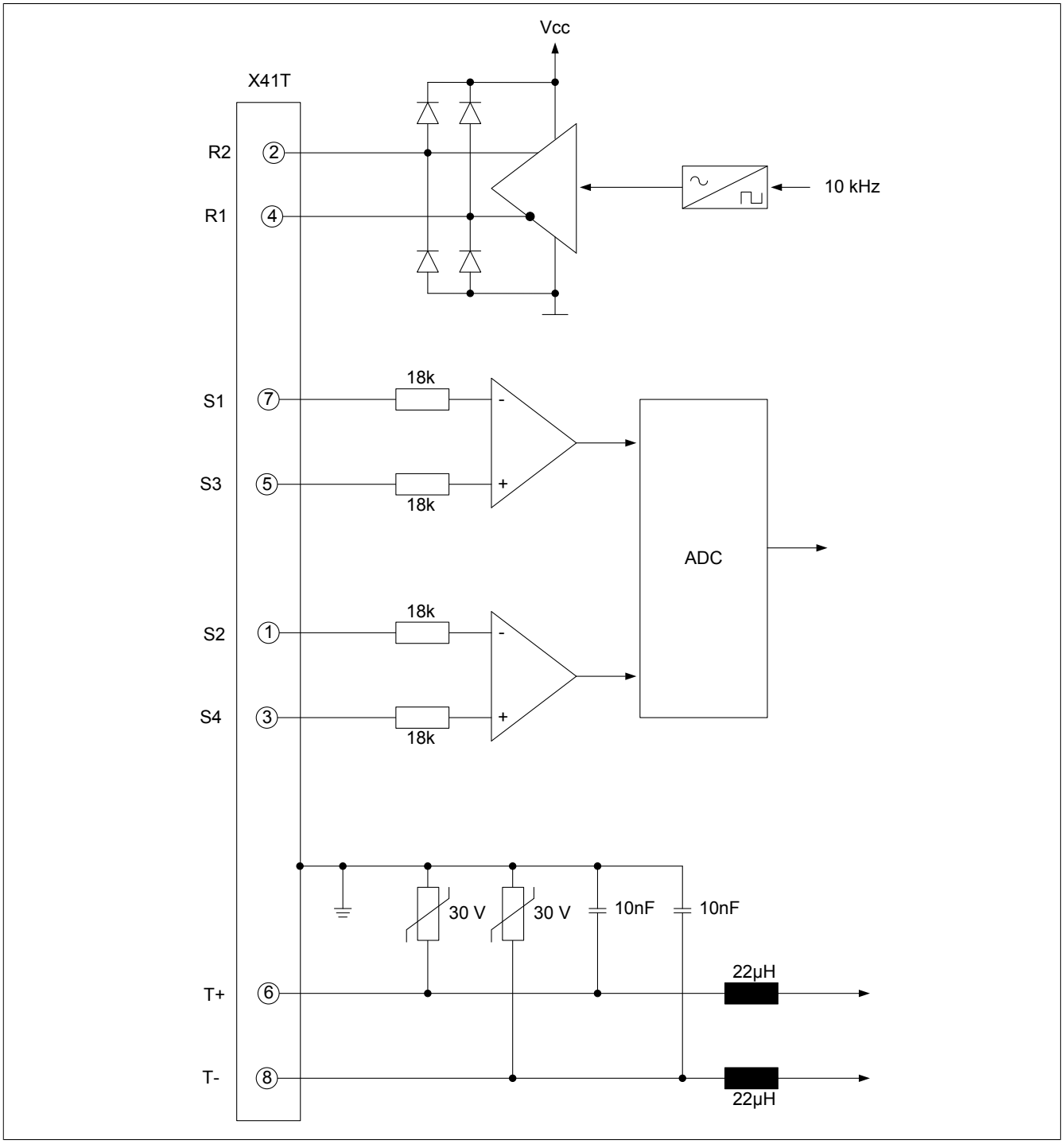

6 Firmware

The firmware is part of the operating system for the ACOPOS P3 8EI servo drive. Firmware is updated by updating the ACOPOS P3 operating system.