# ENC01A

## Connecting cable with socket

ADOGH040MSN0002H04/1G/1D

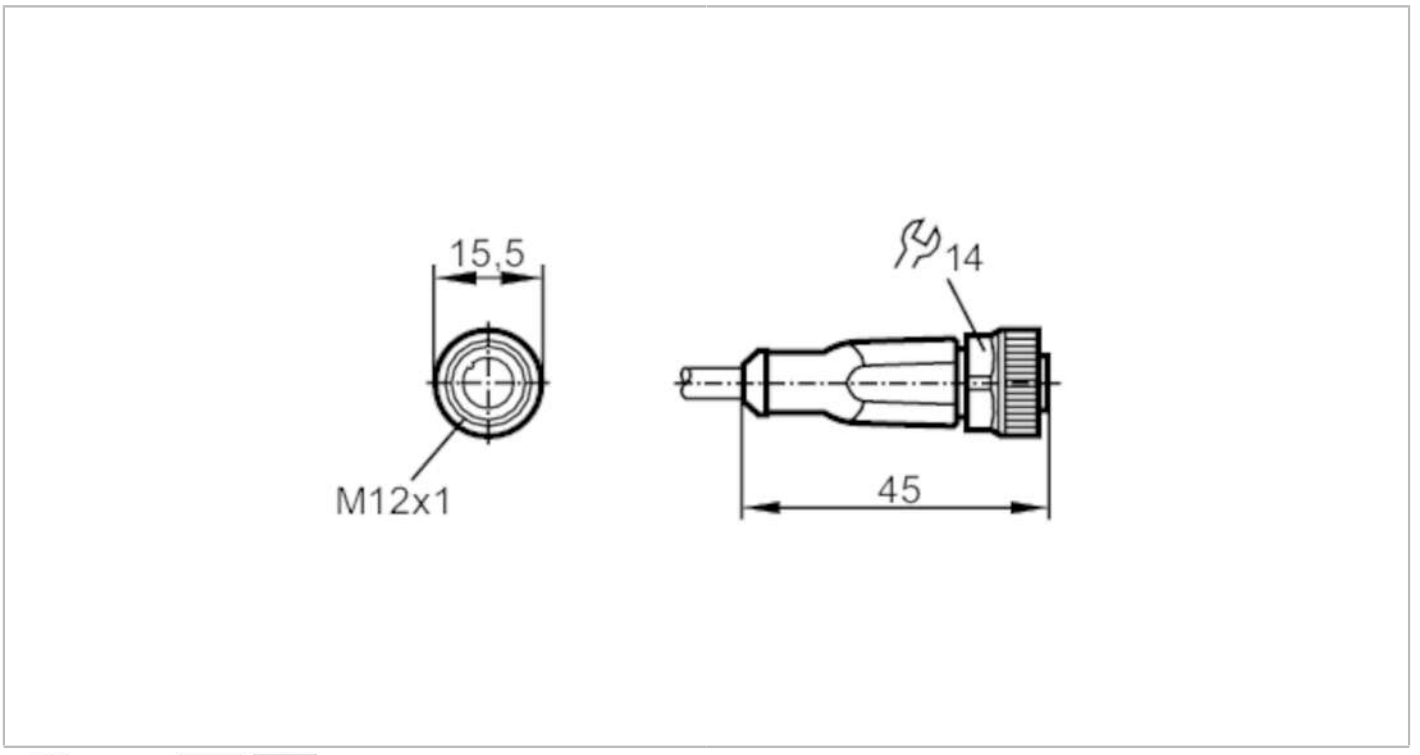


| | | |
|---|---|---|
| **Application** | | |
| Special feature | | Free from silicone; Halogen-free; Gold-plated contacts |
| Free from silicone | | yes |
| Compatible with paint | | yes |
| **Electrical data** | | |
| Operating voltage | [V] | < 30 DC |
| Protection class | | II |
| Max. input power | [mW] | group II: 1000; group IIIB: 1000; group IIIC: 550<br>(Ta < 90 °C) / 650 (Ta < 70 °C) / 750 (Ta < 40 °C) |
| Max. current load total | [A] | 1 |
| **Operating conditions** | | |
| Ambient temperature | [°C] | -25...90 |
| Note on ambient temperature | | for use in hazardous areas: ambient temperature in accordance with unit marking |
| Protection | | IP 67;  (when used outside the hazardous area: IP 68 / IP 69K) |
| **Tests / approvals** | | |
| Approval | | BVS 11 ATEX E 009 X; IECEx BVS 11.0002 X |
| ATEX marking | | II 1G Ex ia IIB T6 Ga Ta: -25...80°C |
| | | II 2G Ex ia IIC T6 Gb Ta: -25...80°C |
| | | II 1D Ex ia IIIC T85°C Da Ta: -25...80°C |
| | | II 1G Ex ia IIB T5 Ga Ta: -25...90°C |
| | | II 2G Ex ia IIC T5 Gb Ta: -25...90°C |
| | | II 1D Ex ia IIIC T95°C Da Ta: -25...90°C |

# ENC01A

## Connecting cable with socket

ADOGH040MSN0002H04/1G/1D

| Safety classification | | |
|---|---|---|
| Max. internal capacitance | [nF] | 0.2 |
| Max. internal inductance | [µH] | 4 |

| Mechanical data | | |
|---|---|---|
| Weight | [g] | 101.8 |
| Dimensions | [mm] | 15.5 x 15.5 x 45 |
| Materials | | housing: TPU orange; Sealing: FKM |
| Material nut | | brass, nickel-plated |

| Remarks | |
|---|---|
| Remarks | Special conditions for safe operation apply for use in hazardous areas. |
| | Observe the corresponding notes in the operating instructions (Ex protection related part). |
| Pack quantity | 1 pcs. |

**Electrical connection**

Cable: 2 m, PUR, Halogen-free, blue, Ø 4.9 mm; 4 x 0.34 mm² (42 x Ø 0.1 mm )

**Electrical connection - socket**

Connector: 1 x M12, straight; coding: A; Locking: brass, nickel-plated; Contacts: gold-plated; Tightening torque: 0.6...1.5 Nm

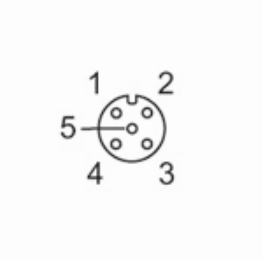


Connection

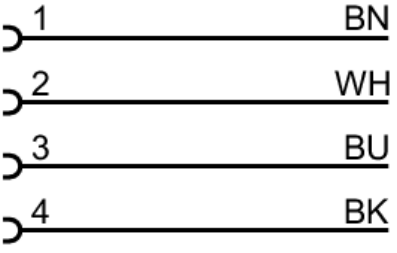


| | Core colours : |
|---|---|
| BK = | black |
| BN = | brown |
| BU = | blue |
| WH = | white |