1000 series

Compact switch joysticks



The 1000 Series is a versatile range of low cost switch joysticks and is ideal for light to medium duty environments where proportional control is not a necessity. Configurable with either single or double pole switching, the 1000 Series can also be specified as screw or bush mounted.
There are two construction options, based on the use of either V3 or V4 switches. V4 switches may be specified with 6A or 10A operation, yielding a smaller joystick than the construction employed for V3 switches which yields up to 16A operation.



KEY FEATURES

- ❑ **Compact size**
- ❑ **Robust construction**
- ❑ **Single or dual axes**
- ❑ **Single or double pole**
- ❑ **Gold contacts**
- ❑ **Bushing or screw mount**
- ❑ **V4 switches**
- ❑ **V3 switches**
- ❑ **Alternative handle selection including pushbutton handles**



1000 series

Compact switch joysticks

OPTION SELECTION



SWITCHES	
1	6A - V4*
2	16A - V3
3	10A - V4*
4	Right Angle V4*
5	5A/250V AC - V4* Faston Style
6	5A/250V AC - V3 Faston Style with screw fixing
7	10A/250V AC - V4* IP67

MOUNTING	
D	22mm Bush*
V	4 Point Screw

POLES	
1	Single Pole
2	Double Pole*

LEVER	
1	Long*
5	Standard V4*
6	For Pushbutton V4*
7	For Double Pole V4 or V3
9	Double Pole and Pushbutton V4*

HANDLE	
C	Round
D	Cylindrical
F	Conical
H	Tall Conical
J	Pushbutton*
M	Pushbutton*
T	Pushbutton*
V	Bullet
AE	Rocker*
AJ	Stainless Steel

LIMITER AND BEZEL SET	
0	Not Supplied
1	Standard

BOOT	
1	Screw Mount
5	Bush Mount*

MODIFIER	
00	None
34	+ Limiter Fitted
39	Slot Limiter Fitted

* Unavailable with V3 construction.

SPECIFICATIONS

MECHANICAL		
Mechanical Life	–	>5 Million Operations
Lever Travel	–	24° (12° from center)
Lever Material	–	Stainless Steel or Brass
Mass/weight	–	40g
Body Material	–	Mineral Filled Nylon-6
Handle Material	–	See Handles Page
Boot Material	–	Neoprene
Mounting - Screw	–	4 x M2.5 Stainless (Slotted)
Mounting - Bush	–	Single Point 22mm Diameter

ELECTRICAL		
Number of Switches	–	2, 4, or 8
Nominal Current	–	6A, 10A, or 16A
Maximum Voltage	–	250V AC
Contacts #1 6A - V4	–	Gold
Contacts #2 10A - V4	–	Silver
Contacts #3 16A - V3	–	Silver
Contacts #4 Right Angle	–	Silver
Contacts #5 Faston Style - V4	–	Silver
Contacts #6 Faston Style - V3	–	Silver
Contacts #7	–	Silver
Switch Contacts	–	Changeover
Contact Life	–	Load Dependent
Pushbutton Cable	–	Blue

ENVIRONMENTAL		
Temperature Range	–	-20°C to 50°C[3]
Above Panel Seal (IP)	–	To IP67[1]

NOTES

- All values are nominal
1. Excludes some handle options.
2. Exact specifications may be subject to configuration. Contact Technical Support for the performance of your specific configuration.
3. Temperature specification may be subject to the chosen switch option. Please refer to factory.

Note: The company reserves the right to change specifications without notice.

1000 series

Compact switch joysticks

DIMENSIONAL DRAWINGS - HANDLES

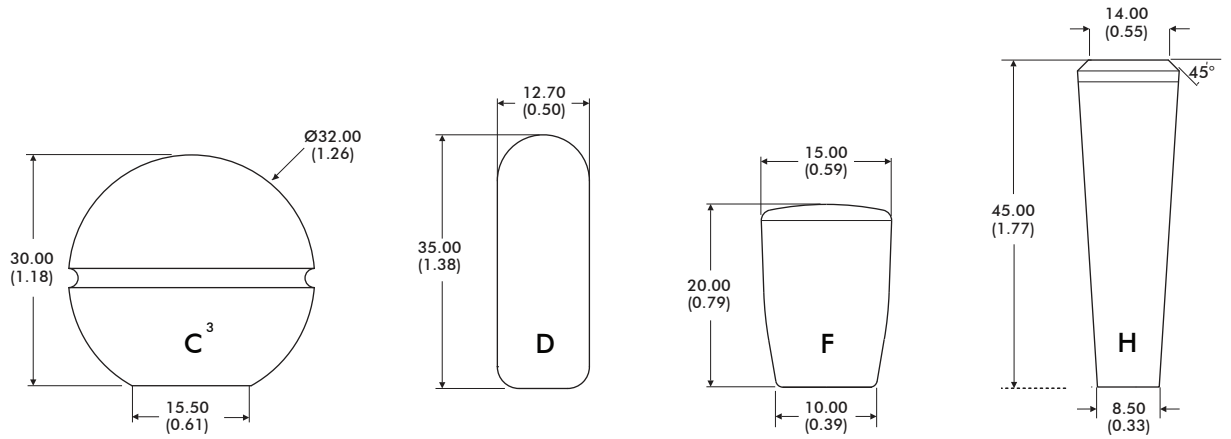

MATERIAL	Phenolic	Aluminum	Nylon	Stainless Steel
FINISH	Gloss	Anodized	Matt	Natural
STANDARD COLOR	Black	Black	Black	Stainless Steel
OTHER COLORS	Not Available	Not Available	Upon Request	Not Available
NOTES:	Supplied Loose			

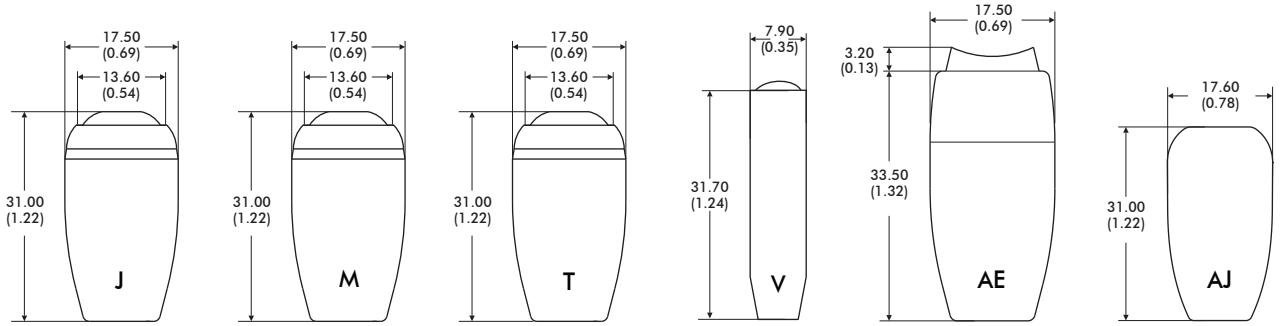

MATERIAL	ABS	Aluminum	Stainless Steel	ABS	Aluminum	Stainless Steel
FINISH	Matt	Anodized	Polished	Gloss	Anodized	Polished
STANDARD COLOR	Black	Black	Stainless	Black	Black	Stainless Steel
OTHER COLORS	Upon Request	Not Available	Not Available	Upon Request	Not Available	Not Available
NOTES:	Uses APEM IS Switch	Uses APEM IS Switch	Uses APEM IS Switch		Uses APEM TR Switch	

NOTES:

1. Dimensions are in mm/(inch)
2. Pushbutton (J, M, T) and rocker switches (AE) are for bushmount configurations only. Dimensions are shown below.
3. Handle is supplied loose because it is larger than panel cutout. The handle should be press fitted to the joystick, once the joystick is installed in the panel

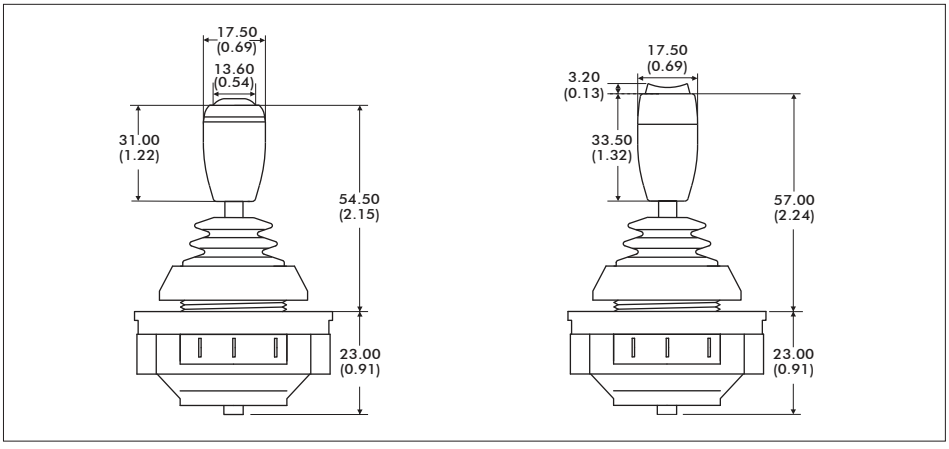

Note: The company reserves the right to change specifications without notice.

1000 series

Compact switch joysticks

DIMENSIONAL DRAWINGS - continued

V4 BUSH MOUNT



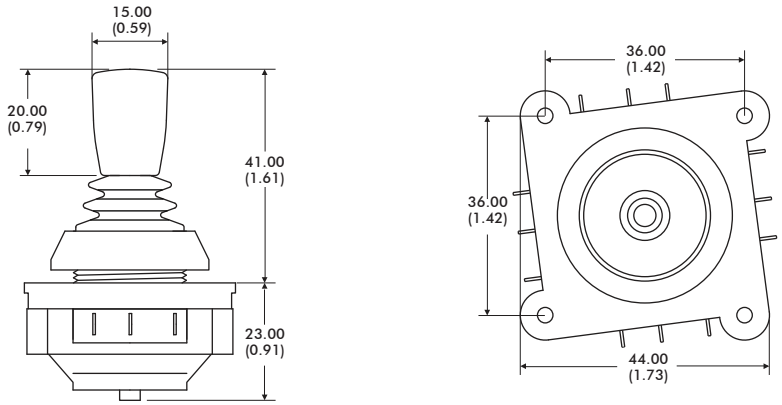

V4 SCREW MOUNT



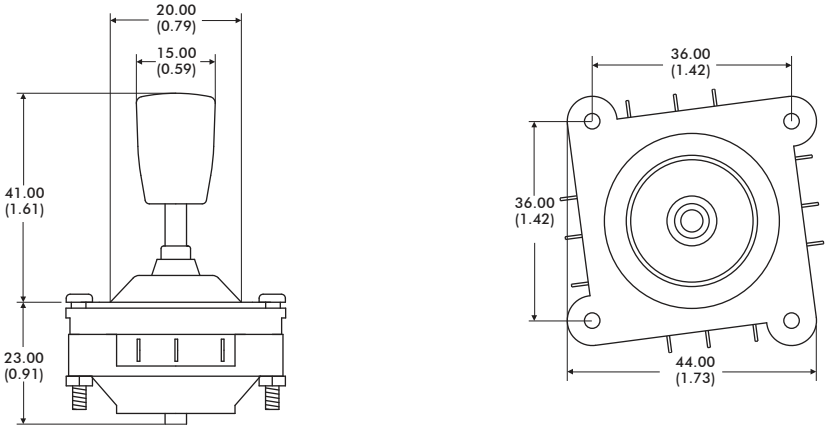

V4 SCREW MOUNT DOUBLE POLE



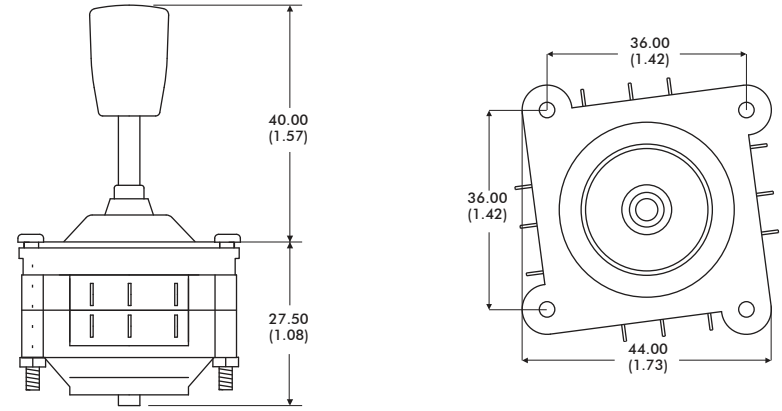

V3 SCREW MOUNT



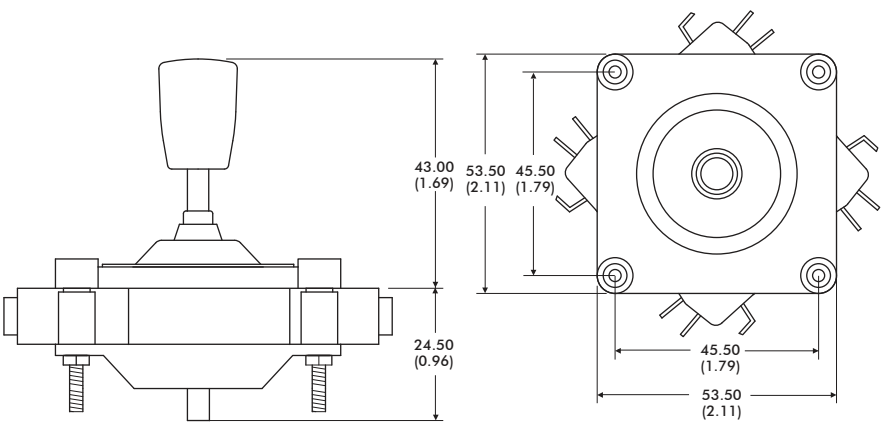

Note: The company reserves the right to change specifications without notice.

MOUNTING CUTOUT DIMENSIONS AND INSTALLATION

V4 SCREW MOUNT

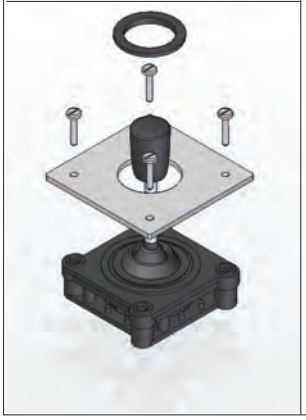

NOTE:
The joystick is mounted from beneath the panel using the 4 x M2.5 machine screws, supplied with the joystick.
Supplied as standard with the joystick is a round bezel which may be fitted (according to customer preference) to finish the front face of the panel. Fitting the bezel is optional, and is not necessary if the panel cut-out finishes the panel.If fitting the bezel is selected then the panel cut out should be toleranced such that the bezel is an interference fit. Additionaly bonding the bezel is recomended.

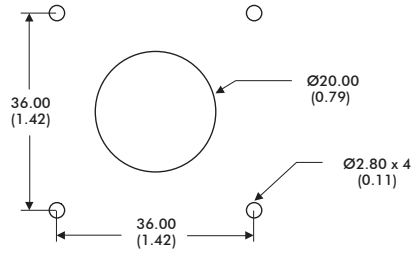

V4 BUSH MOUNT

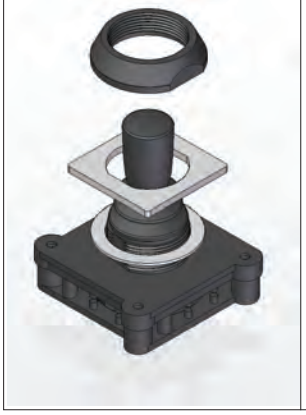

NOTE:
The joystick is mounted from beneath the panel. Supplied as standard with all bush mount joysticks is an adhesive P.V.C. sealing gasket. This should be fitted between the joystick and the panel, in applications where a good seal is needed.

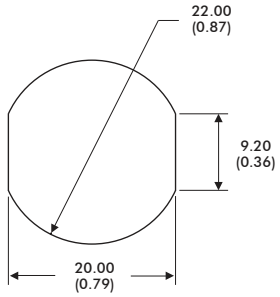

V3 SCREW MOUNT

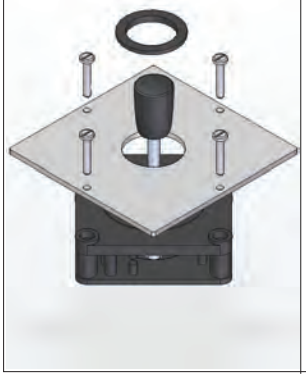

NOTE:
The joystick is mounted from beneath the panel using the 4 x M2.5 machine screws, supplied with the joystick. Supplied as standard with the joystick is a round bezel which may be fitted (according to customer preference) to finish the front face of the panel. Fitting the bezel is optional, and is not necessary if the panel cut-out finishes the panel. If fitting the bezel is selected then the panel cut out should be toleranced such that the bezel is an interference fit. Additionaly bonding the bezel is recomended.

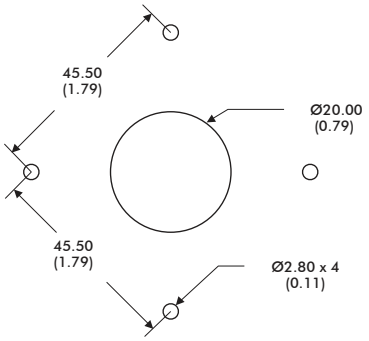

LIMITERS AND BEZEL SET

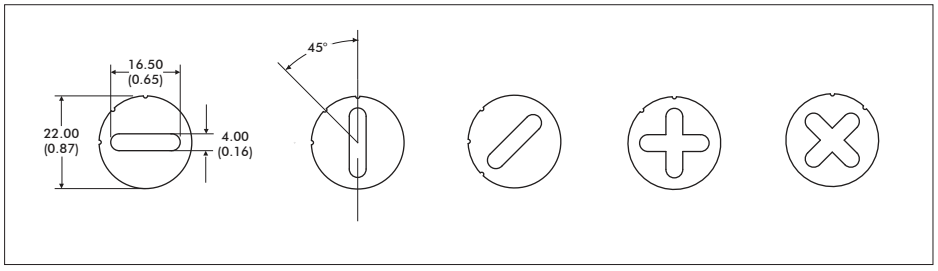

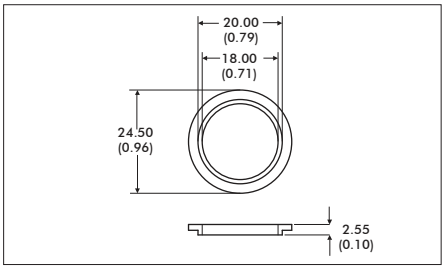

NOTES:
1. Dimensions are in mm/(inch)

Note: The company reserves the right to change specifications without notice.

1000 series

Compact switch joysticks

CONFIGURATION OPTIONS

SWITCHES

Seven switch options are specified as standard. All are configured with change-over contacts, allowing the user flexibility of connection.

Option 1 - V4 - 6A/240V AC should be specified where the joystick will be switching smaller current levels. These switches are supplied with gold flash terminals to ensure reliable switching at very low current levels.
Option 2 - V3 - 16A/240V AC should be specified where the joystick will be switching up to 16A.
Option 3 - V4 - 10A/240V AC should be specified where the joystick may be switching up to 10A.
Option 4 - V4 - 5A/250V AC with right angle terminals, should be specified for PCB mounting or simpler termination.
Option 5 - V5 - 5A/250V AC with 2.8mm Faston style terminals.
Option 6 - V3 - 16A/250V AC with long terminals and screw fixing
Option 7 - V4 - 10A/250V AC sealed to IP67

Note: The construction of the joystick employing V3 switches is not available with as many configuration options.

Life and reliability of the switches is heavily determined by the type of application and parameters such as load. Contact the factory for further advice about the expected switch performance under differing loads or DC supplies.

MECHANICAL OPERATION

All 1000 Series are supplied with an open square gate. As a standard option the joystick may be supplied with an additional plastic limiter set, that allows the customer to retro-fit limiters to reduce the travel to single axis(-), cross (+) or diagonal (X) operation. For harsh environments metal limiters are also available.
Joysticks are supplied as standard without a cable harness, allowing the user flexibility of connection. Alternatively the joystick may be factory configured with fitted limiters or cable harnesses, upon customer request.

SEALING

Two boot options are offered as standard to provide an above-panel seal. When specifying a bush mount joystick select boot option 5 which yields an IP65 seal. Alternatively boot option 1 should be selected for 4 point screw mount joysticks which yields an IP67 seal. As standard, an adhesive P.V.C sealing gasket is supplied with all bush mount joysticks, to ensure a good seal between the joystick body and the panel. The sealing standards quoted are panel seals. It is assumed that the below panel area will be sealed. For applications where below panel seal can not be assured, switch option 7 should be selected.

DOUBLE POLE OPERATION

The construction of the joystick is designed such that both switches nominally trigger simultaneously. Such simultaneous triggering is subject to a +/-2 degree tolerance (between switches) owing to the mechanical tolerances and hysterisis of each switch.

MOUNTING

The 1000 Series is available in two mounting options, four point screw mount or bush mount. The V4 screw mount option is supplied with M2.5 x 20mm screws, whereas the larger construction of V3 screw mount joystick is supplied with M2.5 x 25mm screws. All screws supplied are slotted, pan head machine screws, although longer pan head screws, or countersunk heads are also available upon request.

LEVERS

Lever option 5 provides for a low profile above the panel (41mm/1.61inch), this option is very popular for those applications requiring a compact, stubby design. Lever option 1 is an additional 5mm/0.20inch taller. Lever option 6 should be specified for a push button handle, and lever option 7 is designed for V4 double-pole, or V3 constructions. Lever Option 9 is for double-pole and pushbutton joysticks. Additional custom levers are available upon request.

Note: The company reserves the right to change specifications without notice.