Your Expert Partner for **Human Machine Interfaces**

Lens

Distribution by
Rs-online

19-
931.8

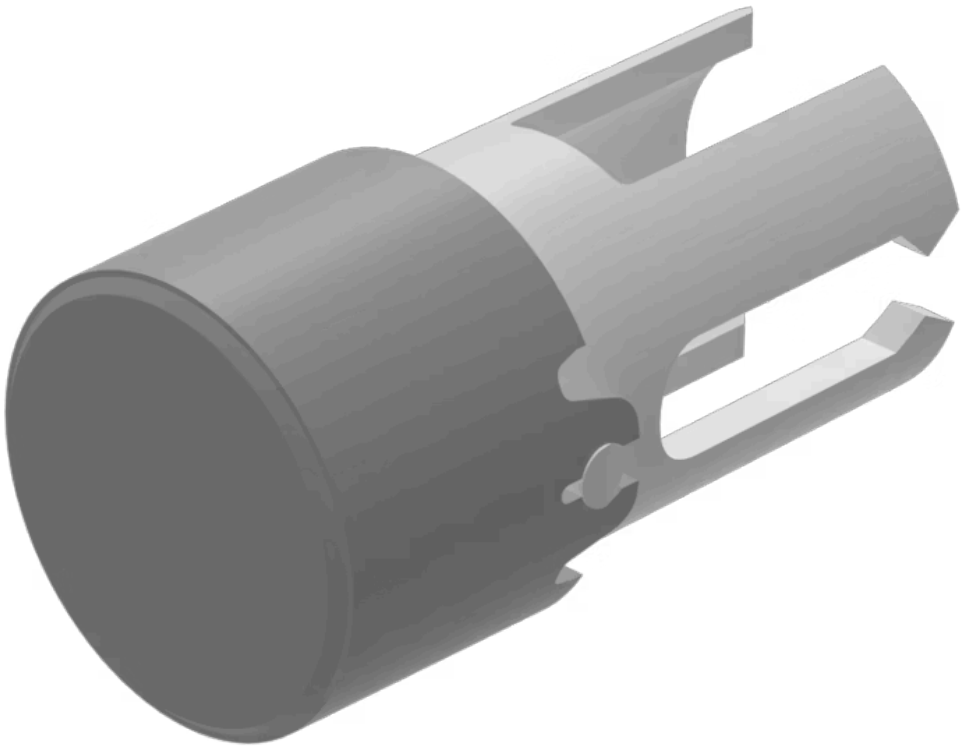

https://rs-online.eao.com/component/19-931.8/...

Your product:



19-931.8
Lens

FRONT

Front form:	Round

OPERATING-/INDICATION PART

Lens colour:	Grey
Lens material:	Plastic
Lens illumination:	Non illuminated
Lens shape:	Flush
Lens optics:	opaque

MECHANICAL CHARACTERISTICS

Weight:	0.001 kg

CERTIFICATE

REACH:	REACH compliant
RoHS:	RoHS compliant

OTHER

Short Description:	Lens, Ø 7.3 mm, Non illuminated, Grey, Flush, Plastic
Dimension:	Ø 7.3 mm