

Model number

BT115A

Activator for F31 series

Features

- Four fixed actuating lugs, offset by 90°
- For right and left rotating drives with 180° rotational motion

Dimensions

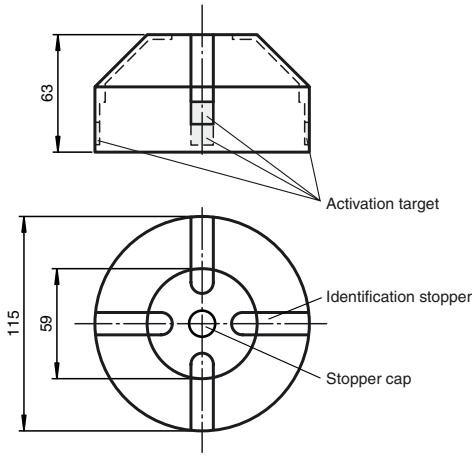

Technical data

General specifications	
Ring diameter	≤ 110 mm
Spring ring height	≤ 7 mm
Ambient conditions	
Ambient temperature	-25 ... 70 °C (248 ... 343 K)
Mechanical specifications	
Shaft diameter	< 90 mm
Shaft height	30 mm and 50 mm
Fixing hole pattern	30 x 130 mm
Material	
Housing	PA
Spacer disk	PA (2 units, 10 mm strong)
Stopper cap	PBT (1 unit black)
Identification stopper	PA (2 units yellow, 2 units black)
Fixing screw	for activator: V2A (1 piece M6 x 25, + 1 piece M6 x 35) for sensors - F31: V2A (4 items M5 x 16, 2 items M5 x 12)
Activation target	V2A (integrated)

Notes

The activator consists of a conductive plastic material which prevents static charging and allows installation in potentially explosive environments.

Release date: 2007-09-13 14:18 Date of issue: 2007-09-13 105191_ENG.xml

Subject to reasonable modifications due to technical advances. Copyright Pepperl+Fuchs, Printed in Germany