NF501A

Inductive NAMUR sensor

IFB2004BN/US/1G/1D

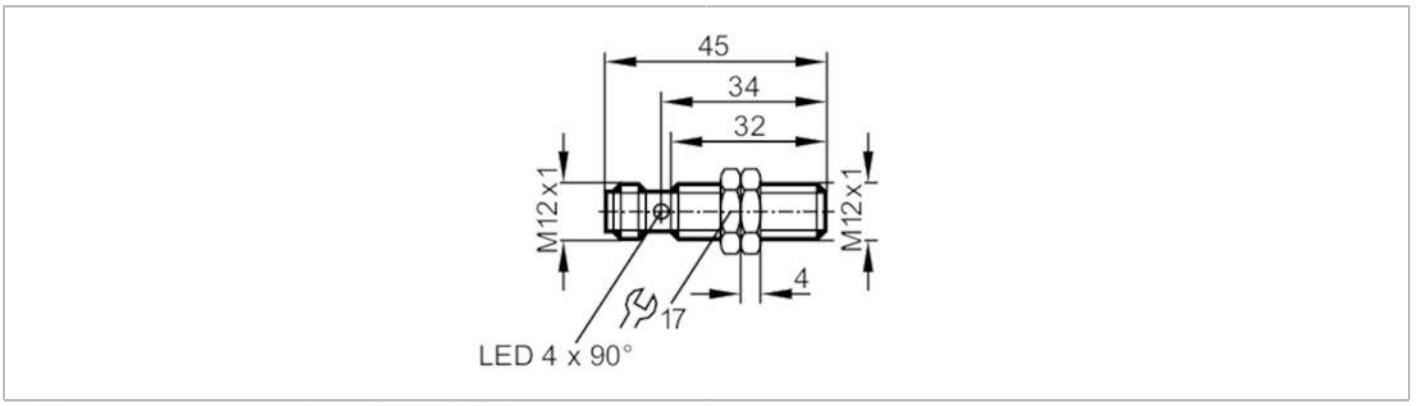

Product characteristics		
Electrical design		NAMUR
Output function		normally closed
Sensing range	[mm]	4
Housing		threaded type
Dimensions	[mm]	M12 x 1 / L = 45
Electrical data		
Connection to switching amplifiers		yes
Switching amplifiers		connection to certified intrinsically safe circuits with the max. values: U = 15 V / I = 50 mA / P = 120 mW
Nominal voltage DC	[V]	8.2; (1kΩ)
Supply voltage DC	[V]	7.5...30; (when used outside the hazardous area)
Current consumption	[mA]	< 1; (disabled; conductive: > 2,1)
Protection class		III
Outputs		
Electrical design		NAMUR
Output function		normally closed
Permanent current rating of switching output DC	[mA]	30; (when used outside the hazardous area)
Switching frequency DC	[Hz]	700
Detection zone		
Sensing range	[mm]	4
Real sensing range Sr	[mm]	4 ± 10 %
Operating distance	[mm]	0...3.24
Accuracy / deviations		
Correction factor		steel: 1 / stainless steel: 0.7 / brass: 0.5 / aluminium: 0.4 / copper: 0.3
Hysteresis	[% of Sr]	1...15
Switch point drift	[% of Sr]	-10...10
Operating conditions		
Ambient temperature	[°C]	-20...70
Protection		IP 67

NF501A

Inductive NAMUR sensor

IFB2004BN/US/1G/1D

Tests / approvals			
Approval		BVS 04 ATEX E 091 X; IECEx BVS 06.0003	
ATEX marking		II 1G Ex ia IIC T6 Ga	
		II 1D Ex ia IIIC T 90°C Da	
EMC		EN 60947-5-6	
Shock/vibration resistance		30 g (11 ms) / 10-55 Hz (1 mm)	
MTTF	[years]	3119	
Safety classification			
Max. internal capacitance	[nF]	210	
Max. internal inductance	[µH]	115	
Mechanical data			
Weight	[g]	71.5	
Housing		threaded type	
Mounting		flush mountable	
Dimensions	[mm]	M12 x 1 / L = 45	
Thread designation		M12 x 1	
Materials		brass special coating; sensing face: PBT; LED window: PA	
Displays / operating elements			
Display		switching status	4 x 90° LED, yellow
Accessories			
Items supplied		lock nuts: 2	
Remarks			
Pack quantity		1 pcs.	
Electrical connection - plug			

Connector: 1 x M12; coding: A



NF501A

Inductive NAMUR sensor

IFB2004BN/US/1G/1D

Connection

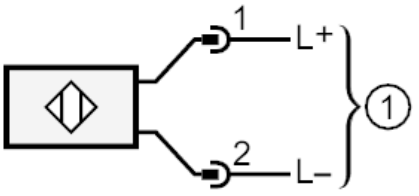

1 = connection to NAMUR amplifiers