T4-0122			
LET	OCN #	DATE	APR
A	962027	04 JUN 96	DR
B	964243	05 NOV 96	DR

CHARACTERISTICS

ELECTRICAL:

CIRCUIT: SINGLE POLE, 4 THROW, CENTER OFF
MOMENTARY CONTACT (SELF RETURN TO CENTER OFF.)
RATING: 1 AMP INDUCTIVE AT 28 VDC FOR 100,000 CYCLES
OVERLOAD: 2 AMP INDUCTIVE AT 28 VDC FOR 100 CYCLES
DWV: 1050 VRMS

MECHANICAL:

SWITCH ACTION SHALL BE SMOOTH, NO SNAP ACTION.
LEVER TRAVEL: 15° MAX. FROM CENTER OFF.
ACTUATING FORCE: 16 OZ.± 6 OZ.
LEVER PIVOT & STOP STRENGTH: SWITCH MUST BE CAPABLE OF WITHSTANDING A FORCE OF 25 LBS (B) APPLIED TO THE ACTUATING BUTTON. THE BUTTON SHALL ALSO WITHSTAND A 15 LB MINIMUM PULL FORCE.

PHYSICAL:

BUTTON: BLACK NYLON
HOUSING: BLACK ANODIZED ALUMINUM ALLOY
SWITCH BODY: BLACK RYTON
ENCLOSURE: DUSTTIGHT AND MEETS ENVIRONMENTAL TESTING OF MIL-S-9419

MOUNTING HARDWARE:
MS25082-B16 HEX NUT
INTERNAL TOOTH LOCKWASHER

MARK: OTTO 21649
T4-0122
& DATE CODE

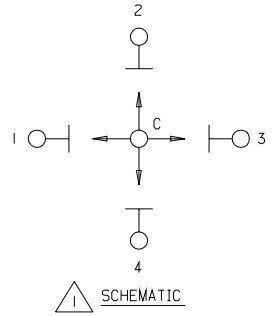

1 SCHEMATIC

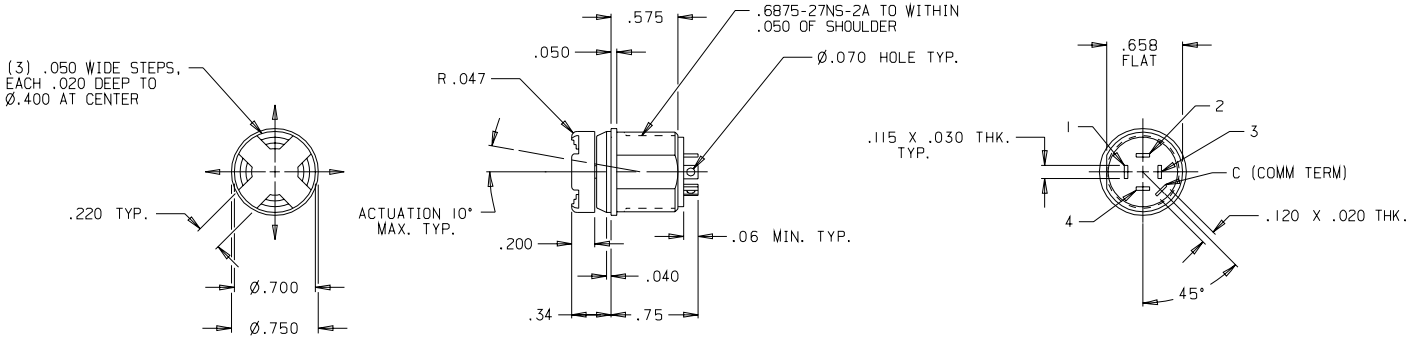

NOTE:

1. CONTACT MADE IN OPPOSITE DIRECTION OF LEVEL TRAVEL.
2. BUTTON ORIENTATION SHALL BE WITHIN ±5° ■ OF THE HOUSING FLAT AS SHOWN.

☐ MINOR
☒ MAJOR
■ CRITICAL
▲ SPC CRITICAL

UNLESS OTHERWISE SPECIFIED: DIMENSIONS ARE IN INCHES. TOLERANCES: .XX ±.03 .XXX ±.010 ANGLES ±2° DO NOT SCALE

THIRD ANGLE PROJECTION

OTTO CONTROLS
DIVISION OF
OTTO ENGINEERING INC.
CARPENTERSVILLE, ILLINOIS USA

THIS DOCUMENT IS THE CONFIDENTIAL PROPERTY OF OTTO ENGINEERING, INC.. IT IS PROVIDED ON A RESTRICTED BASIS AND IS NOT TO BE USED IN ANY WAY DETRIMENTAL TO THE INTERESTS OF OTTO ENGINEERING, INC..

PART NAME
SWITCH, 4-WAY TOGGLE

DRWN. LH	SIZE	FSCM NO	DRAWING NO.	REV.
CHKD. EB	B	21649	T4-0122	B
APPD. WGC				

DATE 17 MAR 93 | WT. 10 GRMS APPRX | SCALE 1:1 | SHEET 1 OF 1