	Mounting bracket for BOS 5K	**Mounting bracket** for BOS 5K	**Mounting bracket** for BOS 5K	
	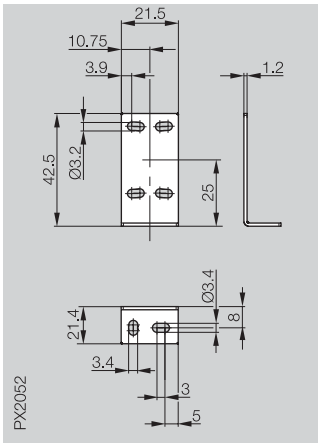	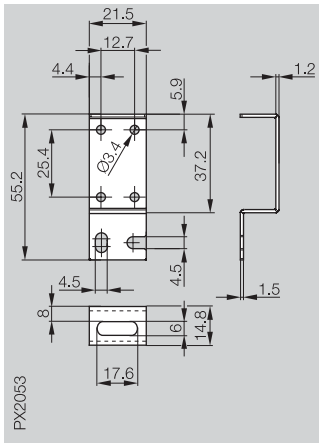	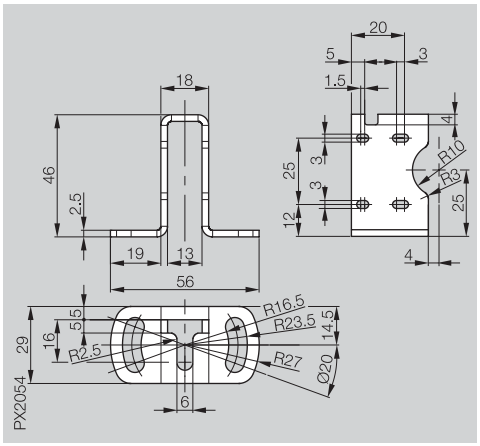	
Ordering code	BOS 5-HW-1	BOS 5-HW-2	BOS 5-HW-3	

	Mounting bracket for BOS 26K, BOS 25K and BOS 21M	**Mounting bracket** for BOS 35K	**Mounting bracket** for BOS 36K	
	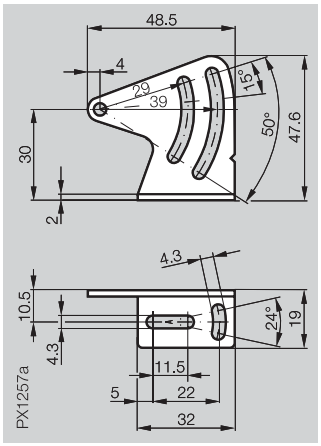	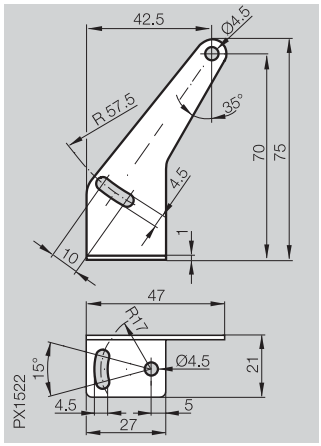	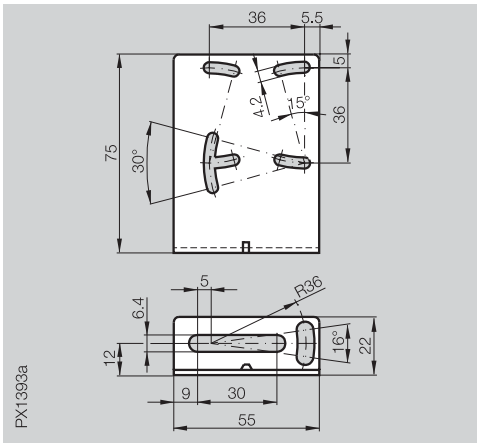	
Ordering code	BOS 26-HW-1	BOS 35-HW-1	BOS 36-HW-1	



Mounting bracket
for BOS 6K and BOS 21M

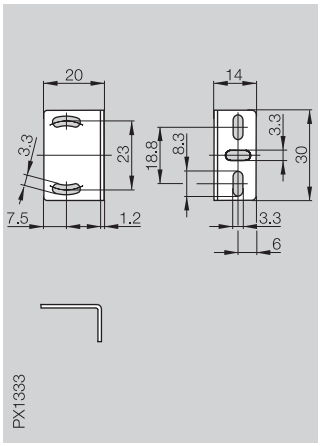

BOS 6-HW-1

Mounting bracket
for BOS 21M

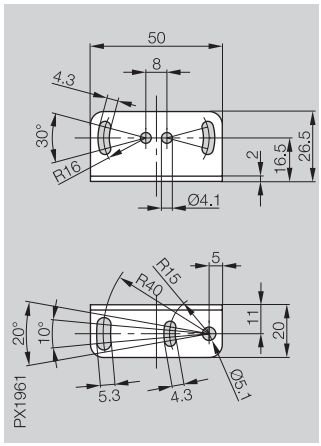

BOS 21-HW-1

Mounting bracket
for BOS 21M

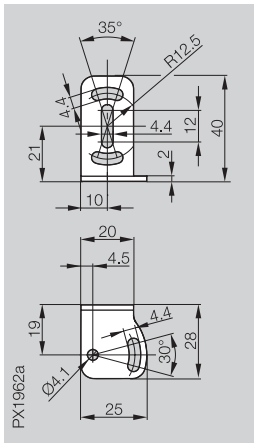

BOS 21-HW-2

Mounting bracket
for BOS 21M

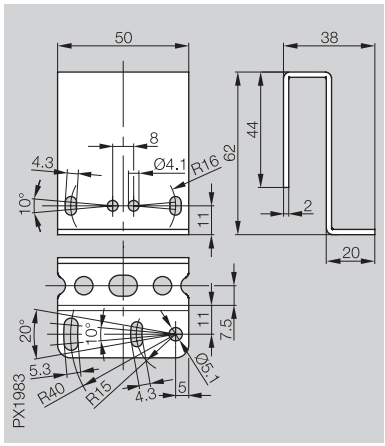

BOS 21-HW-3

Mounting bracket
for BOD 63M

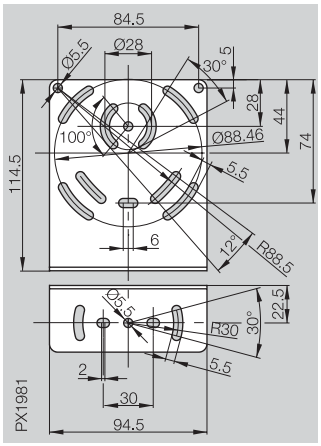

BOD 63-HW-1

Mounting bracket
for BOS 65K

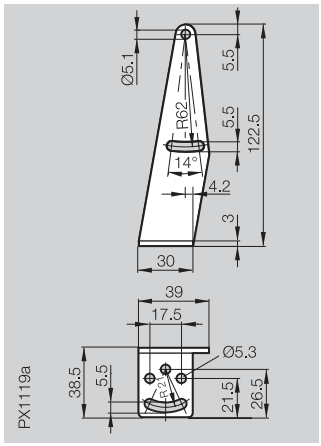

BOS 65-HW-1

Mounting bracket
for BOD 66M

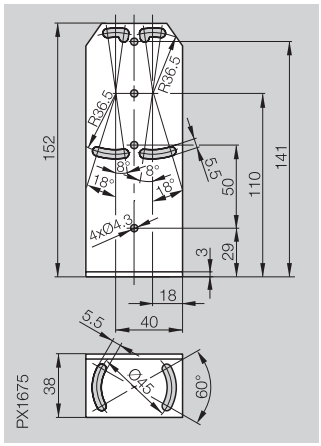

BOD 66-HW-1

Mounting bracket
for BOS 74K

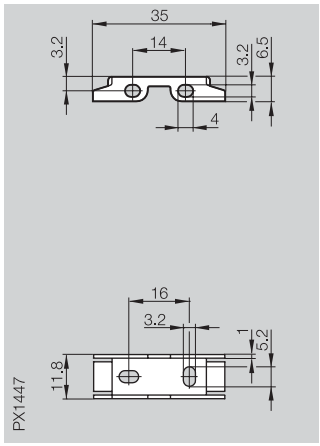

BOS 74-HW-1

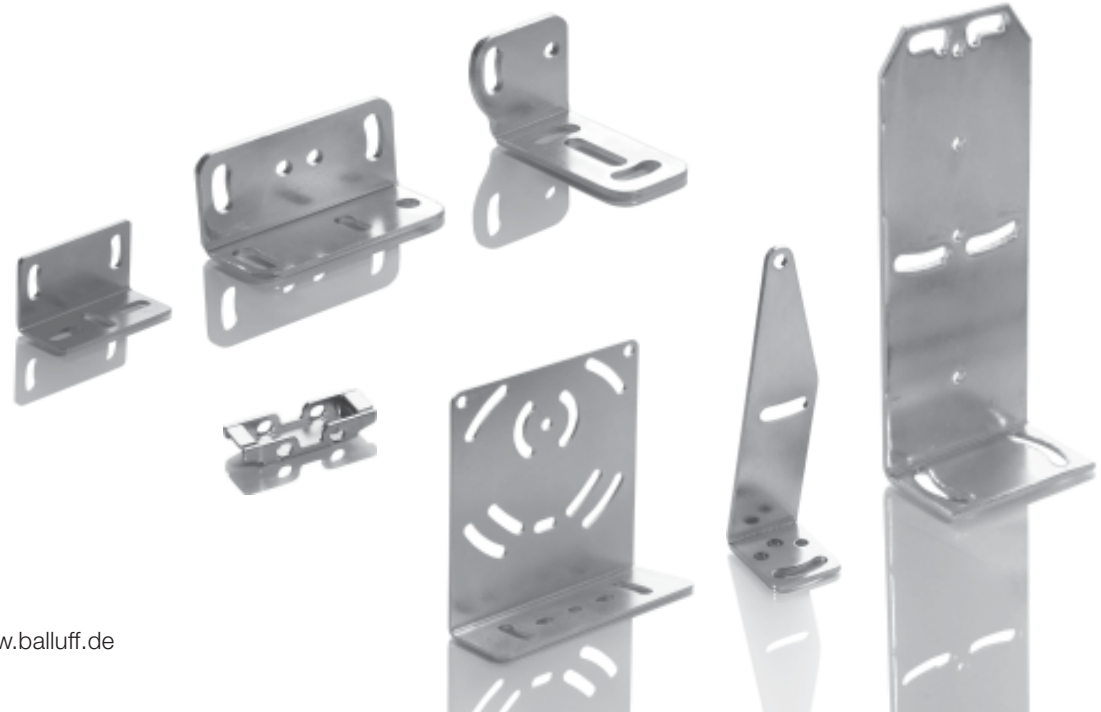

2.3
6
more holders ... page 6.2 ...

	Clamp for BOS 21M	**Clamp** for BOS 21M	**Adapter plate** for BOS 21M, BOS 25K, BOS 26K and BOS R-1
	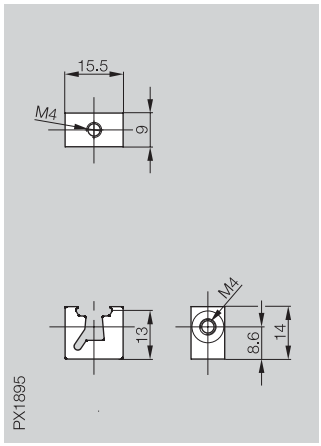	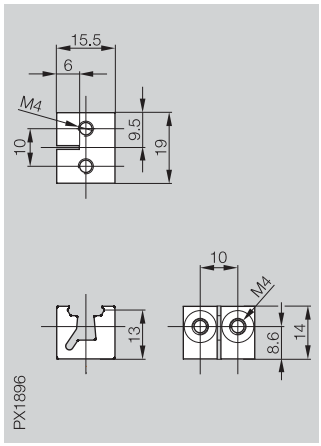	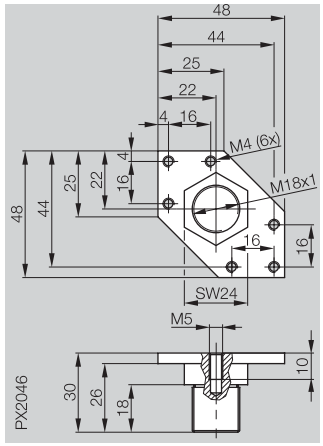
Ordering code	BOS 21-KH-1	BOS 21-KH-2	BOS 21-AD-1

	Mounting bracket for reflector BOS R-10 and BOS R-25	**Mounting bracket** for reflector BOS R-26	**Mounting bracket** for reflector BOS R-9 and BOS R-22
	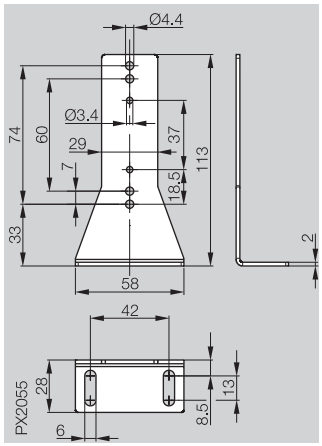	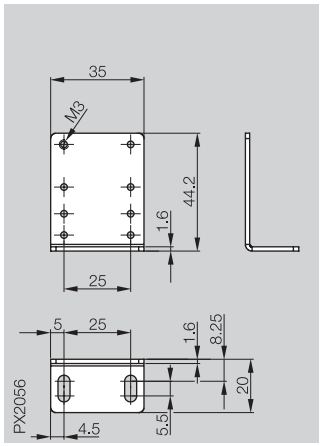	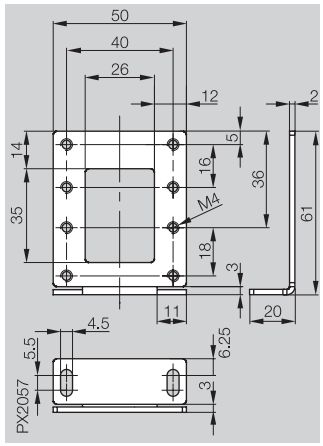
Ordering code	BOS 5-HW-4	BOS 5-HW-5	BOS 5-HW-6

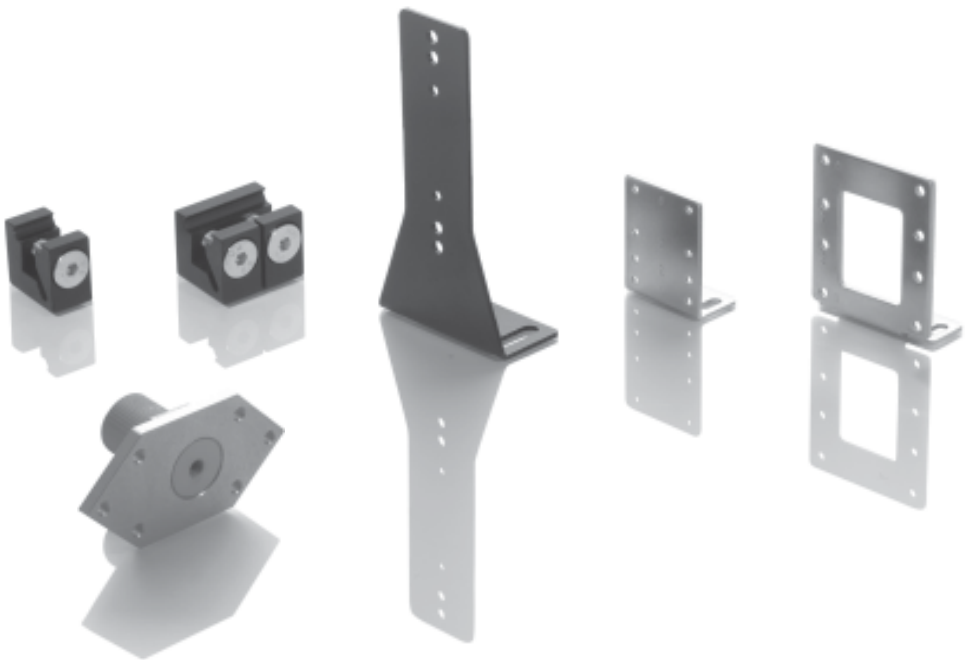

	Mounting cuff for sensors in series BOS 12M	Mounting clamp with ball joint for sensors in series BOS 18M	Mounting clamp for sensors in series BOS 18KF/KW
	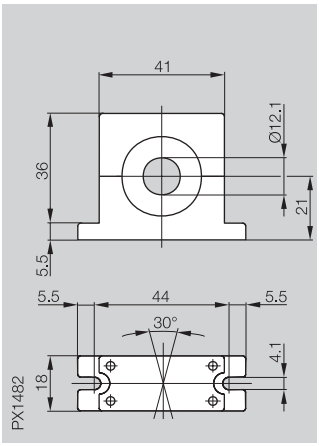	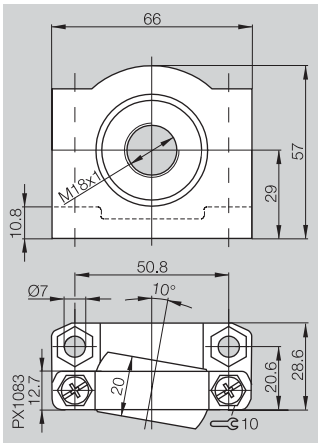	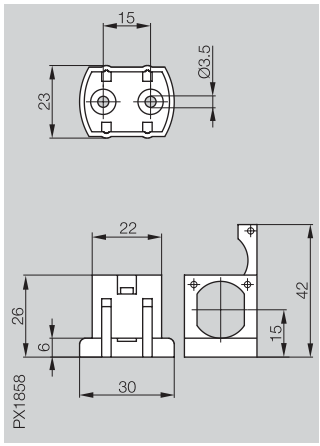
Ordering code	BOS 12,0-BS-1	BOS 18,0-KB-1	BOS 18,0-KB-2

	Mounting clamp with ball joint for sensors in series BOS 30M
	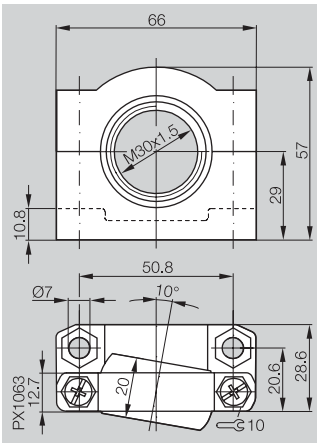
Ordering code	BOS 30,0-KB-1



Description	**Holding system**
Use	for flexible installation, may be combined with other Balluff accessories

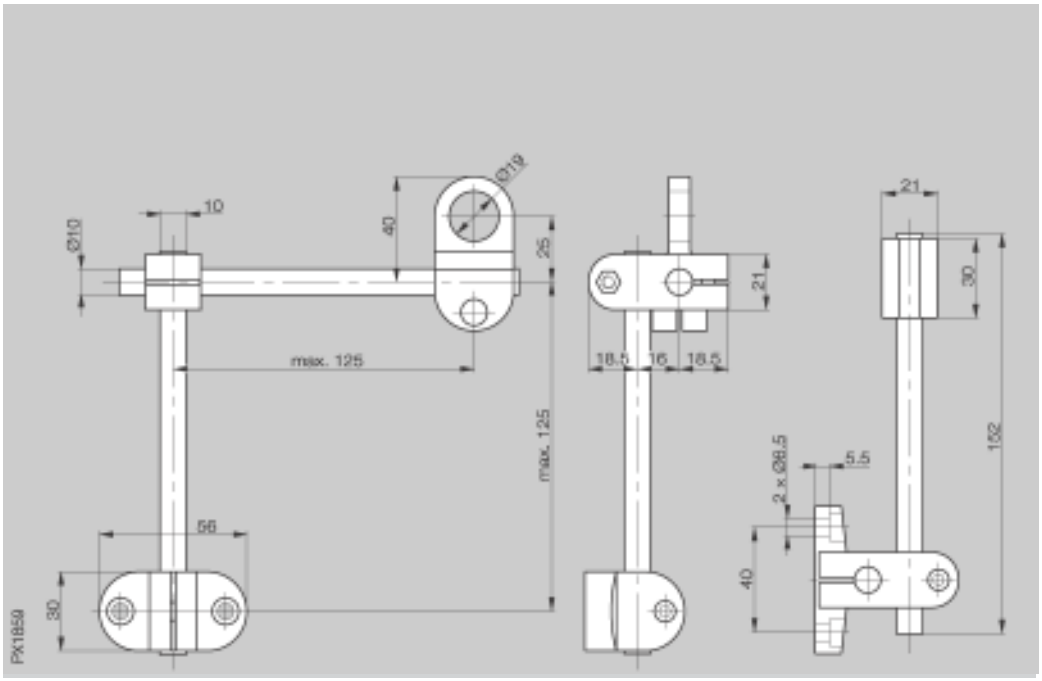

Ordering code	BOS 18-HS-1



Description	**Holding system**
Use	for flexible installation, may be combined with other Balluff accessories

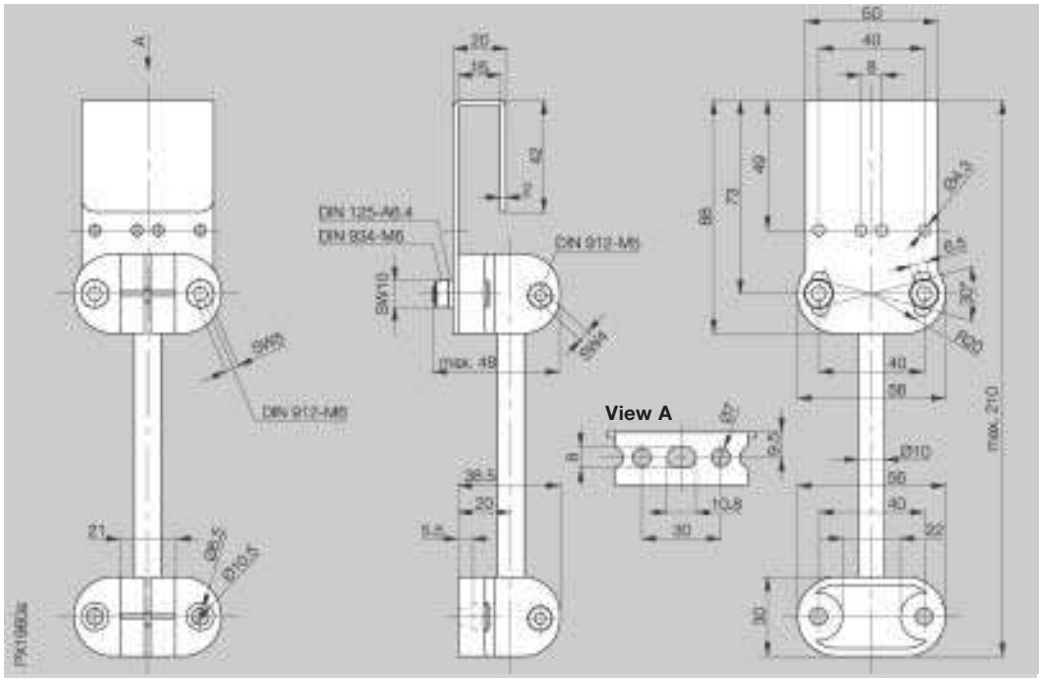

Ordering code	BOS 21-HS-1

