

Model Number

NCB50-FP-A2-P1

Features

- **50 mm flush**
- **4-wire DC**

Technical Data

General specifications			
Switching element function		PNP	NO/NC
Rated operating distance	s_n	50 mm	
Installation		flush	
Output polarity		DC	
Assured operating distance	s_a	0 ... 40.5 mm	
Reduction factor r_{Al}		0.38	
Reduction factor r_{Cu}		0.35	
Reduction factor r_{304}		0.83	
Nominal ratings			
Operating voltage	U_B	10 ... 60 V DC	
Switching frequency	f	0 ... 80 Hz	
Hysteresis	H	typ. 3 %	
Reverse polarity protection		reverse polarity protected	
Short-circuit protection		pulsing	
Voltage drop	U_d	≤ 3 V	
Operating current	I_L	0 ... 200 mA	
Off-state current	I_r	0 ... 0.5 mA	
No-load supply current	I_0	≤ 20 mA	
Time delay before availability	t_v	≤ 300 ms	
Operating voltage indicator		LED, green	
Switching state indicator		LED, yellow	
Functional safety related parameters			
$MTTF_d$		670 a	
Mission Time (T_M)		20 a	
Diagnostic Coverage (DC)		0 %	
Ambient conditions			
Ambient temperature		-25 ... 70 °C (-13 ... 158 °F)	
Mechanical specifications			
Connection type		screw terminals	
Core cross-section		up to 2.5 mm^2	
Housing material		PBT	
Sensing face		PBT	
Housing base		PBT	
Degree of protection		IP68	
Mass		445 g	
Compliance with standards and directives			
Standard conformity			
Standards		EN 60947-5-2:2007 IEC 60947-5-2:2007	
Approvals and certificates			
UL approval		cULus Listed, General Purpose	
CSA approval		cCSAus Listed, General Purpose	
CCC approval		Certified by China Compulsory Certification (CCC)	

Dimensions

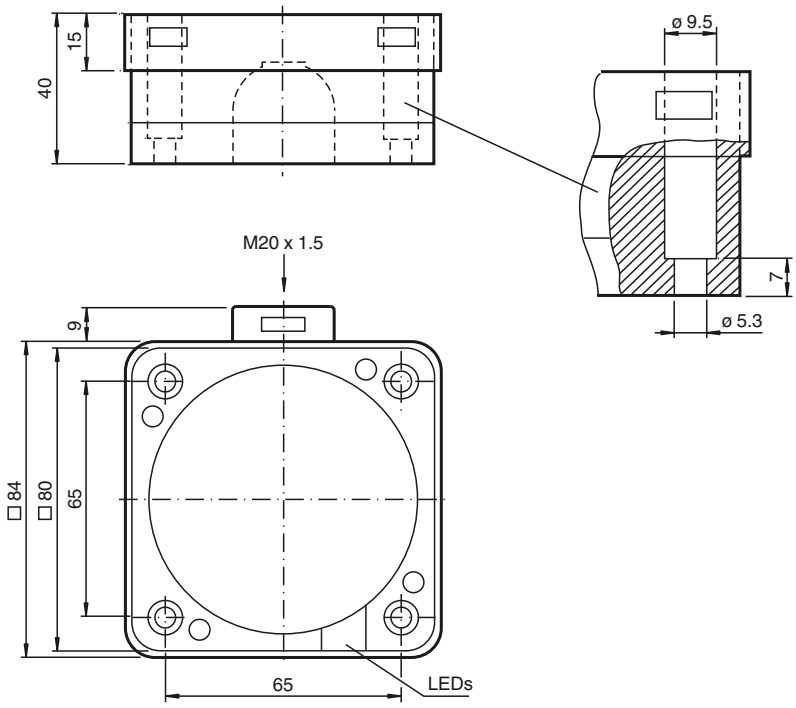

Release date: 2015-10-08 08:06 Date of issue: 2015-10-08 119181_eng.xml

Electrical Connection

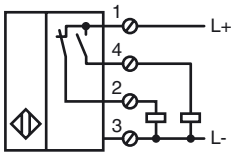

Installation Hint

These sensors are especially designed for embeddable mounting in conveyor floors. Due to its precise location in metal base plates the sensor is afforded a high degree of mechanical protection. No clearance is required between the sensor and the base plate, avoiding the need for protective guarding to prevent possible foot injury.

The large sensing range ensures positive detection, and thus provides consistent control and monitoring of the conveyor.

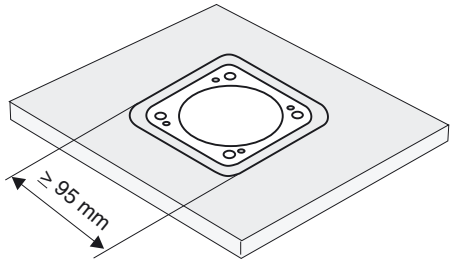

Warning!
Once the metal screening has been removed, the sensor can no longer be embeddable mounted.

Release date: 2015-10-08 08:06 Date of issue: 2015-10-08 119181_eng.xml

Refer to “General Notes Relating to Pepperl+Fuchs Product Information”.
Pepperl+Fuchs Group www.pepperl-fuchs.com
USA: +1 330 486 0001 fa-info@us.pepperl-fuchs.com
Germany: +49 621 776 4411 fa-info@de.pepperl-fuchs.com
Singapore: +65 6779 9091 fa-info@sg.pepperl-fuchs.com
PEPPERL+FUCHS SENSING YOUR NEEDS