IIC220

Inductive AS-Interface sensor

IIK2014BASI /M/US-104

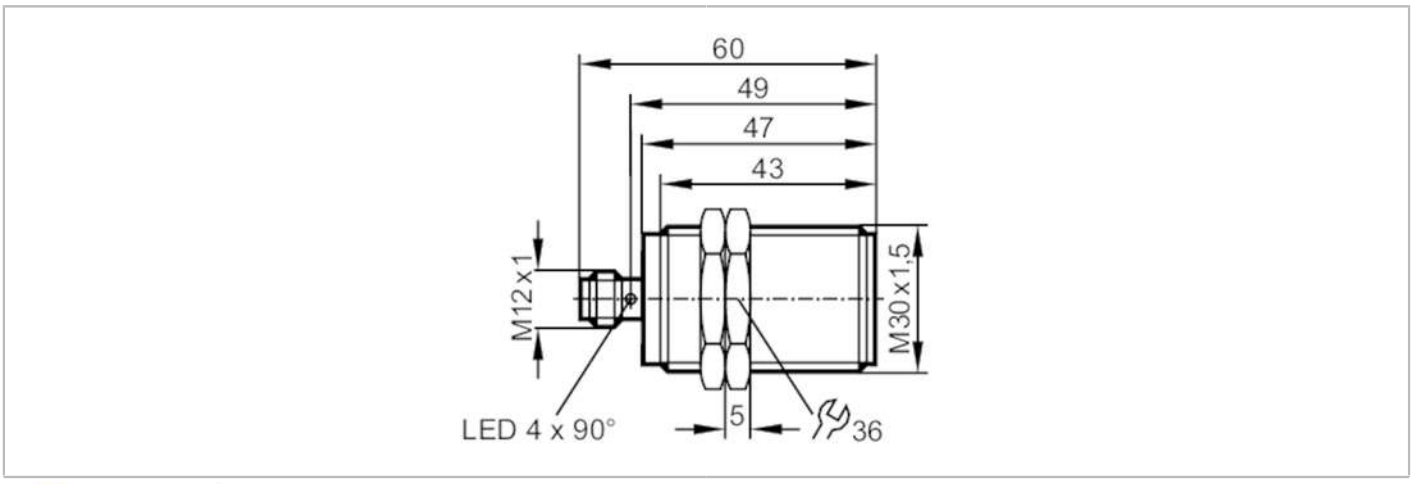

Product characteristics		
Electrical design		AS-i
Sensing range	[mm]	14
Housing		threaded type
Dimensions	[mm]	M30 x 1.5 / L = 60
Application		
Special feature		Gold-plated contacts
Application		Use in machine tools, coolants and lubricants
Electrical data		
Operating voltage	[V]	26.5...31.6 DC
Current consumption	[mA]	< 30
Protection class		III
Reverse polarity protection		yes
Max. power-on delay time	[ms]	1000
Outputs		
Electrical design		AS-i
Switching frequency DC	[Hz]	100
Detection zone		
Sensing range	[mm]	14
Operating distance	[mm]	0...11.34
Accuracy / deviations		
Correction factor		steel: 1 / stainless steel: 0.7 / brass: 0.5 / aluminium: 0.45 / copper: 0.35
Hysteresis	[% of Sr]	1...20
Operating conditions		
Ambient temperature	[°C]	-25...70
Protection		IP 68; ("Coolant")

IIC220

Inductive AS-Interface sensor

IIK2014BASI /M/US-104

Tests / approvals						
EMC		EN 61000-4-2 ESD			4 kV CD / 8 kV AD	
		EN 61000-4-3 HF radiated			10 V/m	
		EN 61000-4-4 Burst			2 kV	
		EN 61000-4-6 HF conducted			10 V	
		EN 55011			class B	
MTTF	[years]	1390				
UL approval		Ta			-25...70 °C	
		Enclosure type			Type 1	
		power supply			Limited Voltage/Current	
		File number UL			E174191	

AS-i classification						
AS-i version		2.1				
Extended addressing mode		yes				
AS-i I/O configuration	[hex]	0				
AS-i ID code	[hex]	A.F				
AS-i certificate		57401				
Assignment of the data bits		Designation	switching signal	not used	not used	not used
		status = 0	target outside the active zone	-	-	-
		status = 1	target within the active zone	default value	default value	default value

Mechanical data		
Weight	[g]	121.5
Housing		threaded type
Mounting		flush mountable
Dimensions	[mm]	M30 x 1.5 / L = 60
Thread designation		M30 x 1.5
Materials		stainless steel (1.4404 / 316L); sensing face: LCP uncoloured

Displays / operating elements		
Display	switching status	4 x 90° LED, yellow
	function	1 x LED, red

Accessories	
Items supplied	lock nuts: 2

Remarks	
Pack quantity	1 pcs.

Electrical connection - plug

Connector: 1 x M12; coding: A; Contacts: gold-plated



IIC220

Inductive AS-Interface sensor

IIK2014BASI /M/US-104

Connection

