213356
OGWTI-100G3-T4
Frame light barrier

- IO-Link
- Fork structure
- Robust metal housing
- Compact design
- High resolution
- Short response time
- Intuitive teach-in using a membrane keyboard and with fine adjustment
- Operating principle: dynamic or static
- 4 operating modes as an IO-Link parameter



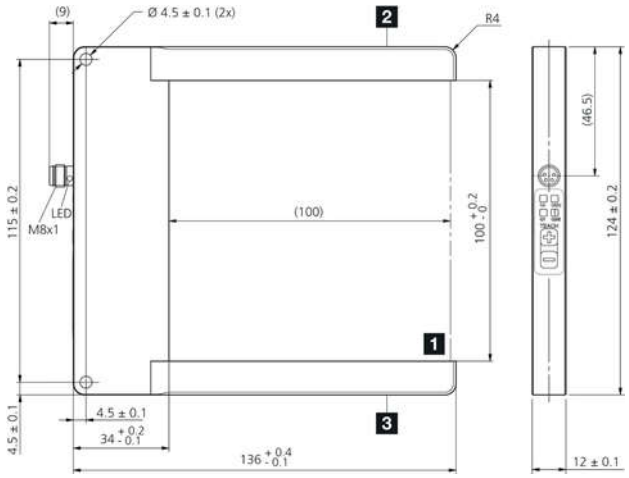

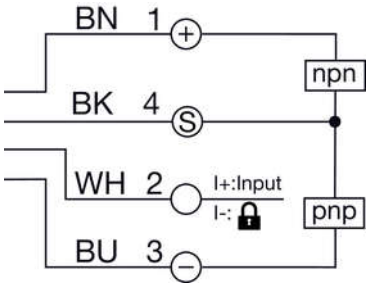

1) Sensing zone
2) Transmitter
3) Receiver

BK: black BN: brown BU: blue WH: white

Function

Technical data (typ.)	+20°C, 24 V DC
Service voltage	18 … 30 V DC
No-load current (max.)	< 45 mA
Inverse polarity protection	Yes
Short-circuit protection	Yes
Housing dimensions	136 x 124 x 12 mm
Housing material	Die-cast zinc (Black, powder-coated)
Material	Plastic (Window)
Weight	224 g
Operating principle	Optical
Evaluation	Switching, Dynamic/static switchable
Design	Fork
Operating modes	Static, Dynamic, Shadowing
Switching output	Push-pull, 100 mA, NO/NC, switchable
Voltage drop (max.)	2 V
Interface	■ IO-Link V1.1.3, COM2 (Smart Sensor Profile) ■ 2nd Edition V1.1 SSP 4.1.1
Pulse stretching	20 ms adjustable
Light source	LED
Color	Infrared
Detection range	100 x 100 mm

di-soric GmbH & Co. KG . Steinbeisstraße 6 . DE-73660 Urbach . www.di-soric.com

213356
OGWTI-100G3-T4
Frame light barrier

Technical data (typ.)	+20°C, 24 V DC
Resolution	Ø 2,5 mm (dynamic), Ø 3,0 mm (static)
Sensitivity adjustment	Keypad
Display	LED Green - Status, yellow - Switching output 1, white - static/dynamic, yellow/red - Switching output 2 / Warning
Response time	0,05 ms
Release time	0,05 … 10.000 ms
Ambient temperature during operation	-10 … +60 °C
Protection type	IP 67
Connection	Connector, M8, 4-pin
Connection cable	TK … /4

More information / accessories	https://www.di-soric.com/213356

© di-soric . Right to change reserved