E33602

Process adapter Tri-Clamp

ADAPT G1-CLAMP ISO2852/1-1.5

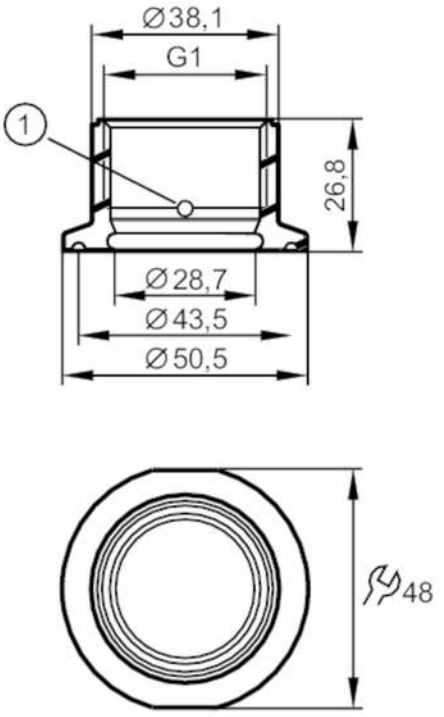

1: Leakage port

EC 1935/2004

Application		
Design		with leakage port
Pressure rating	[bar]	100
Tests / approvals		
Pressure Equipment Directive		A possible classification to PED depends on the application and has to be carried out by the user / operator.
Pressure Equipment Directive EAC		The adapter is intended for use in devices, machines and installations that do not fall under the categories of the technical rule TR CU 032/2013.
Safety instructions		The compatibility between medium and product material has to be checked in all applications.
Mechanical data		
Weight	[g]	156.5
Materials (wetted parts)		stainless steel (1.4435 / 316L) ; surface characteristics : Ra<0,4 / Rz 4
Sensor connection		G 1 sealing cone
Process connection		Clamp DN25...DN40 (1...1,5") DIN 32676 (ISO 2852)
Sealing		Gasket
Hygienic equipment class to DIN 11866		H4
Accessories		
Items supplied		O-ring: 26 x 3, EPDM, FDA compliant, E30438
		O-ring: 26 x 3, FKM, FDA compliant, E30437
Remarks		
Pack quantity		1 pcs.