TW2101

Infrared temperature sensor

TW-100KLBM30-KFDKG/US

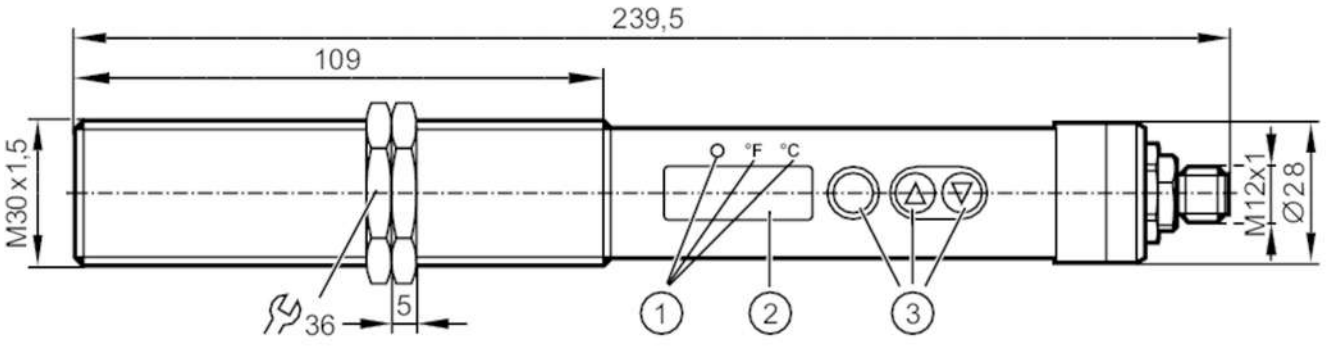

1 LEDs Display unit / switching status
2 7-segment LED display 4-digit
3 programming buttons

IO-Link

Product characteristics			
Number of inputs and outputs		Number of digital outputs: 1; Number of analogue outputs: 1	
Measuring range		250...1600 °C	482...2912 °F
Communication interface		IO-Link	
Application			
Application		tempering temperatures; glass melting; graphite; ceramics; metals; forging; sintering; heat treatment; rolling	
Electrical data			
Operating voltage	[V]	18...32 DC; (to SELV/PELV)	
Current consumption	[mA]	< 50	
Min. insulation resistance	[MΩ]	100; (50 V DC)	
Protection class		III	
Reverse polarity protection		yes	
Power-on delay time	[s]	< 1	
Inputs / outputs			
Number of inputs and outputs		Number of digital outputs: 1; Number of analogue outputs: 1	
Inputs			
Test input		type 3 (IEC 61131-2)	
Outputs			
Total number of outputs		2	
Output signal		switching signal; analogue signal; IO-Link; (configurable)	
Electrical design		PNP	
Number of digital outputs		1	
Output function		normally open / normally closed; (parameterisable)	
Max. voltage drop switching output DC	[V]	2.5	
Permanent current rating of switching output DC	[mA]	150	
Number of analogue outputs		1	
Analogue current output	[mA]	4...20	

TW2101

Infrared temperature sensor

TW-100KLBM30-KFDKG/US

Max. load	[Ω]	500	
Short-circuit protection		yes	
Type of short-circuit protection		pulsed	
Short-circuit proof		yes	
Overload protection		yes	
Detection zone			
Wave length range	[µm]	1...1.7	
Measuring/setting range			
Measuring range		250...1600 °C	482...2912 °F
Set point SP		251...1600 °C	484...2912 °F
Reset point rP		250...1599 °C	482...2910 °F
Analogue start point		250...1400 °C	482...2552 °F
Analogue end point		450...1600 °C	842...2912 °F
In steps of		1 °C	1 °F
Resolution			
Resolution of switching output	[K]	1	
Resolution of analogue output	[K]	0.2; (+ 0.03% of the set measuring span)	
Resolution of display	[K]	1	
Accuracy / deviations			
Accuracy	[K]	< ± 0,5 %; (of measured value, min. 4 K (degree of emission = 1, T = 23 °C))	
Repeatability	[K]	1	
Response times			
Response time	[ms]	2; (T > 600 °C)	
Software / programming			
Adjustment of the switch point		programming buttons	
Parameter setting options		analogue range; normally open / normally closed; switch-on/ switch-off delay; Damping; Peakhold; emissivity; simulation function	
Interfaces			
Communication interface		IO-Link	
Transmission type		COM2 (38,4 kBaud)	
IO-Link revision		1.1	
SDCI standard		IEC 61131-9	
SIO mode		yes	
Required master port type		A	
Process data analogue		16	
Process data binary		1	
Min. process cycle time	[ms]	3.6	
Supported DeviceIDs		**Type of operation**	**DeviceID**
		default	717
Operating conditions			
Ambient temperature	[°C]	0...65	
Storage temperature	[°C]	-20...80	

TW2101

Infrared temperature sensor

TW-100KLBM30-KFDKG/US

Max. relative air humidity	[%]	95; (non condensing)	
Protection		IP 65	
Tests / approvals			
EMC		DIN EN 61000-6-2	
		DIN EN 61000-6-4	
Shock resistance		DIN EN 60068-2-27	30 g (11 ms)
Vibration resistance		DIN EN 60068-2-6	5 g (10...2000 Hz)
MTTF	[years]	70.6	
Mechanical data			
Weight	[g]	509	
Housing		threaded type	
Dimensions	[mm]	M30 x 1.5 / L = 239.5	
Thread designation		M30 x 1.5	
Materials		threaded sleeve: stainless steel (303/1.4305); polyester	
Lens material		tempered optical glass	
Displays / operating elements			
Display		Display unit	2 x LED, yellow
		switching status	1 x LED, yellow
		function display	7-segment LED display, 4-digit
		measured values	7-segment LED display, 4-digit
		setting aid	LED pilot light, green
Operating elements		3	pushbuttons
Accessories			
Items supplied		lock nuts: 2	
Remarks			
Remarks		Use a screened cable to protect infrared temperature sensors from interference.	
		The screen must be connected to the housing of the sensor via the connector.	
Pack quantity		1 pcs.	

TW2101

Infrared temperature sensor

TW-100KLBM30-KFDKG/US

Electrical connection

Connection

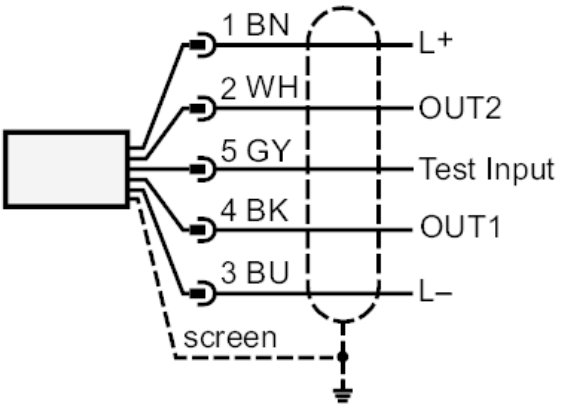

OUT1:	switching output / IO-Link
OUT2:	analogue output
	Core colours :
BK =	black
BN =	brown
BU =	blue
GY =	grey
WH =	white

Diagrams and graphs

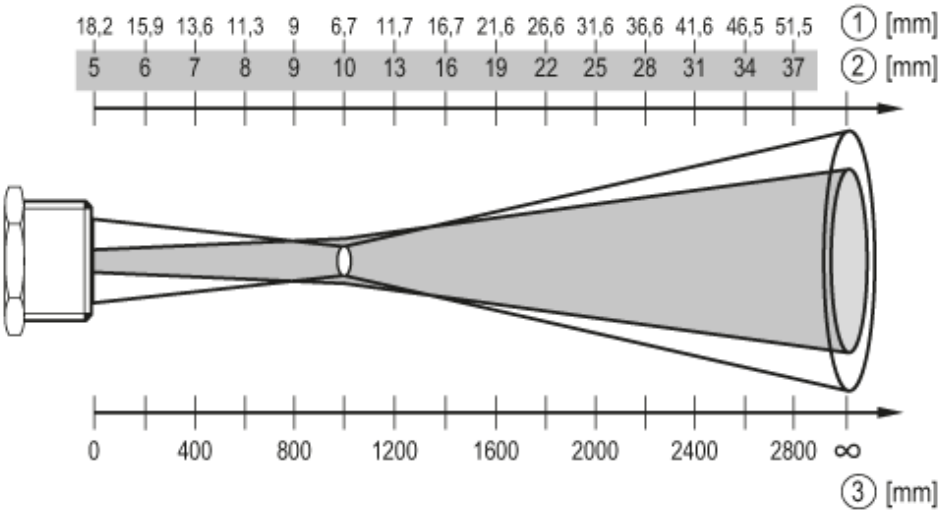

1 diameter of the measured spot

2 diameter LED pilot light

3 measuring distance