Round cylinder, Series RPC

R481609426

2024-04-05

AVENTICS Series RPC Round cylinders

The AVENTICS Series RPC round profile cylinders offer a wide variety of connection options. They are easy to clean and suitable for packaging applications in the food industry due to food grade lubricants. The Series RPC can also be used in standard applications across machine automation needs.



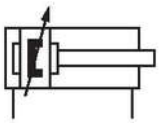

Technical data

Industry	Industrial
Standards	ISO 6431
Type	Version: ISO-type
Piston Ø	32 mm
Stroke	250 mm
Ports	G 1/8
Functional principle	Double-acting
Cushioning	Pneumatic adjustable cushioning
Magnetic piston	Piston with magnet
Environmental requirements	Industry standard ATEX optional
Piston rod thread - type	External thread
Piston rod thread	M10x1,25
Piston rod	single
Scraper	Standard Industry Scraper
Pressure for determining piston forces	6,3 bar
Retracting piston force	435 N
Extracting piston force	505 N
Min. ambient temperature	-20 °C
Max. ambient temperature	80 °C

Round cylinder, Series RPC

R481609426

Min. working pressure	1 bar
~~Max. working pressure~~	~~10 bar~~
Cushioning length	16.5 mm
Cushioning energy	4.8 J
Weight 0 mm stroke	0.34 kg
Weight +10 mm stroke	0.015 kg
Stroke max.	1200 mm
Medium	Compressed air
Min. medium temperature	-20 °C
Max. medium temperature	80 °C
Max. particle size	50 µm
Min. oil content of compressed air	0 mg/m³
Max. oil content of compressed air	5 mg/m³
Clamping piece for magnetic field sensor necessary	Clamping piece for magnetic field sensor necessary

Material

Piston rod	Stainless Steel
Scraper material	Polyurethane
Seal material	Polyurethane
Material, front cover	Aluminum
Cylinder tube	Stainless Steel
End cover	Aluminum
Nut for piston rod	Steel, chrome-plated
Part No.	R481609426

Technical information

ATEX-certified cylinders with identification II 2G Ex h IIC T4 Gb / II 2D Ex h IIIC T135°C Db_X can be generated in the Internet configurator.

The operating temperature range for ATEX-certified cylinders is -20°C ... 60°C.

The pressure dew point must be at least 15 °C less than ambient and medium temperature and may not exceed 3 °C.

The oil content of compressed air must remain constant during the life cycle.

Use only the approved oils from AVENTICS. Further information can be found in the “Technical information” document (available in https://www.emerson.com/en-us/support).

Round cylinder, Series RPC

R481609426

Dimensions

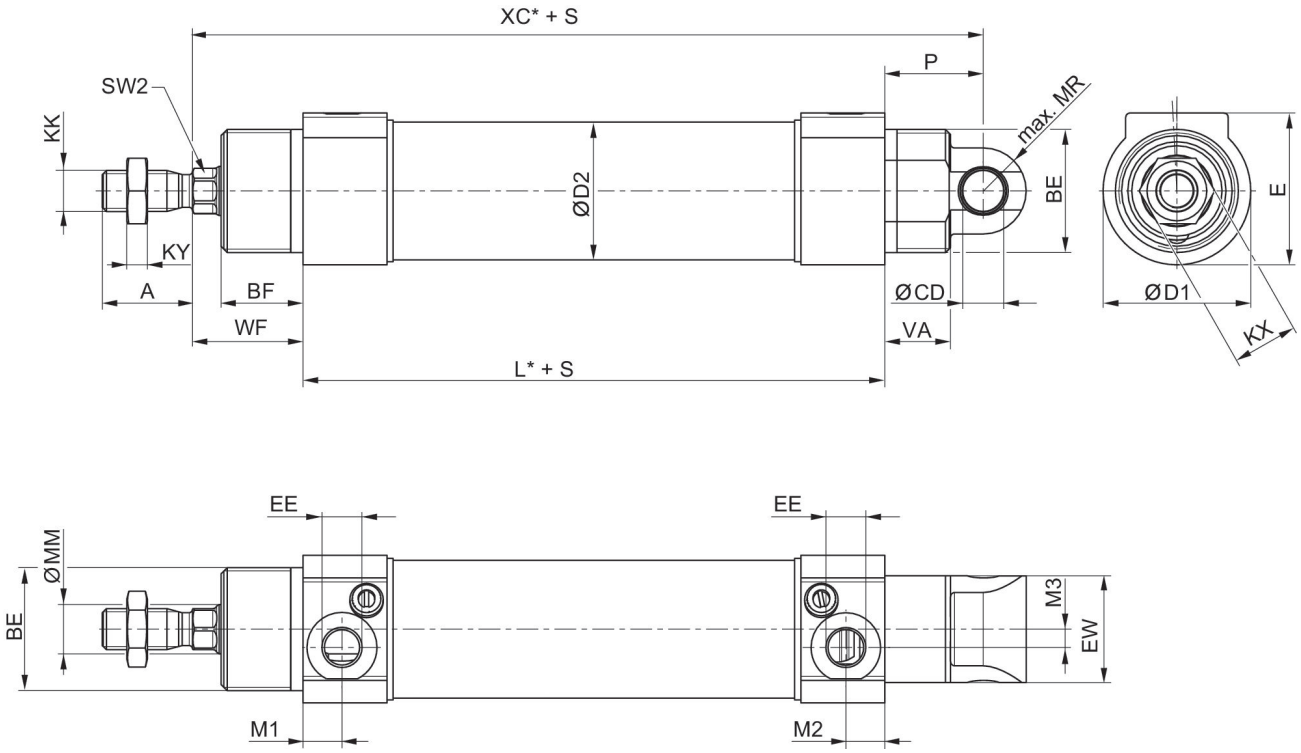

S = stroke

Piston Ø	A	BE	BF	Ø CD H8	Ø D1	Ø D2	E	EE	EW
32	22	M30x1,5	20	10	36	33,6	37	G 1/8	26
40	24	M38x1,5	23	12	45	41,6	45	G 1/4	28
50	32	M45x1,5	24	12	55	52,4	55	G 1/4	32
63	32	M45x1,5	26,5	16	69	65,4	69	G 3/8	40

Piston Ø	KK	KX	KY	L	Ø MM	M1	M2	M3	MR
32	M10x1,25	16	5	92	12	9,5	9,5	4,5	10,5
40	M12x1,25	18	6	107	16	11,5	11,5	5	13
50	M16x1,5	24	8	110	20	11,5	11,5	5	13
63	M16x1,5	24	8	125	20	13	13,5	5	17

Piston Ø	P	SW2	VA	WF	XC
32	24	10	16	27	143
40	21	13	19	32	160
50	25	17	18,5	35	170
63	31	17	23	35	191

Round cylinder, Series RPC

R481609426

Overview drawing

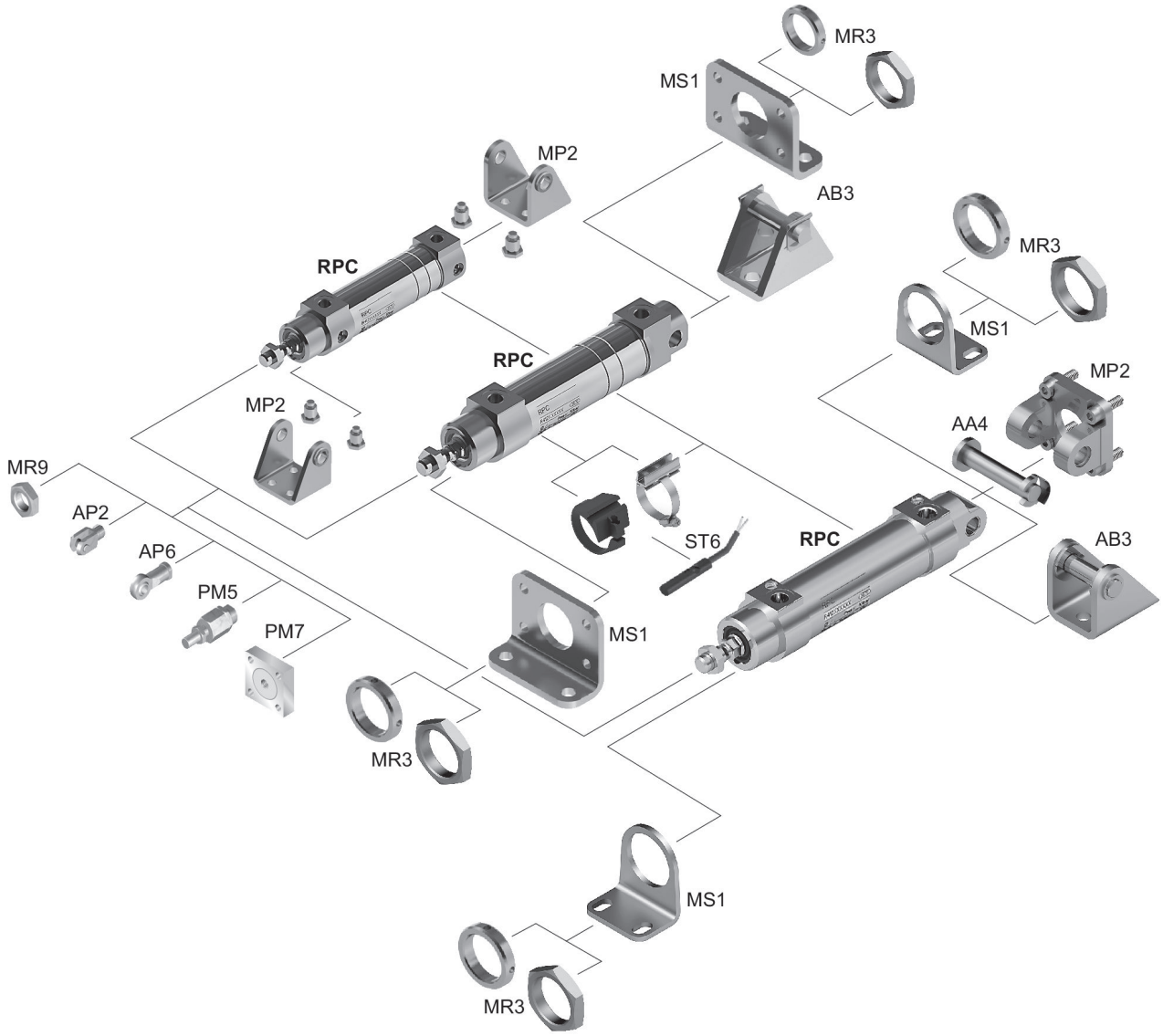

NOTE: This overview drawing is only for orientation to indicate where the various accessory parts can be fastened to the cylinder. The illustration has been simplified for this purpose. It is thus not possible to derive the dimensions from this overview.