R 1/4" drive metric 6-point sockets



Standards:

NF ISO 2725-1, NF ISO 1711-1, ISO 2725-1, ISO 1711-1, DIN 3124, ASME B107.5

Description:

- OGV® profile: more powerful tightening, preserves fasteners.
- Finish: bright chrome.
- Available as sets on metal rack (Ref R.40E).

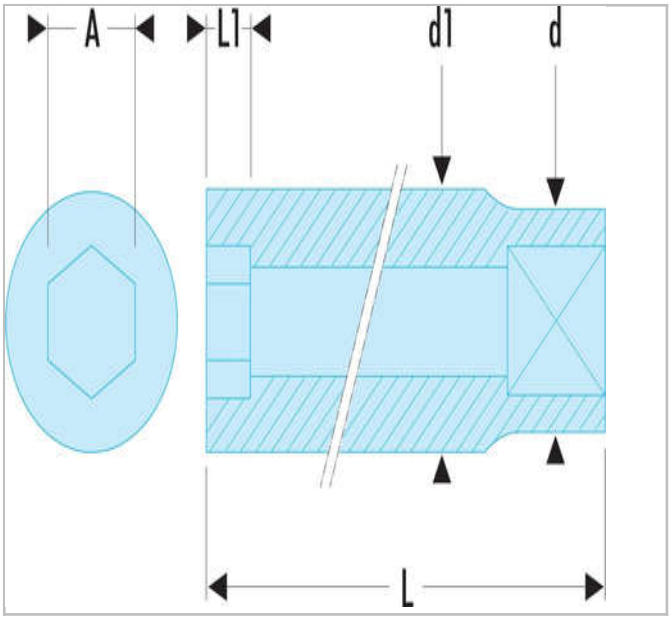

© FACOM 2020

	A [mm]	Diameter [mm]	Diameter D1 [mm]	Length L [mm]	Length L [mm]	Length L1 [mm]	Height H3 [mm]	Weight [Kg]	Hex Size [mm]
R.10	10.0	14.7	14.7		22.0	7.8	7.8		
R.11	11.0	15.8	15.8		22.0	9.0	9.0		
R.12	12.0	17.0	17.0		22.0	9.5	9.5		
R.13	13.0	17.7	17.7		22.0	10.0	10.0		
R.14	14.0	18.7	18.7		22.0	10.0	10.0		
R.3.2	3.2	11.2	5.9	22.0	2.4	2.4		0.004	6.0
R.4	4.0	11.2	6.9		22.0	2.6	2.6		
R.5	5.0	11.2	8.2		22.0	4.8	4.8		
R.5.5	5.5	11.2	8.8	22.0	4.8	4.8		0.006	6.0
R.6	6.0	11.2	9.4		22.0	5.6	5.6		
R.7	7.0	11.0	11.0		22.0	6.0	6.0		
R.8	8.0	12.0	12.0		22.0	6.5	6.5		
R.9	9.0	13.2	13.2		22.0	6.5	6.5		

© FACOM 2020