MURR ELEKTRONIK
stay connected

EXACT12, 4XM12, 5-POLE, CAP, PLUG. SCREW-TERM

4-way, 5-pole
Form PNP
Screw plug-in terminals
Plastic housings with good resistance against chemicals and oils.
The resistance to aggressive media should be individually tested for your application. Further details on request.

Link to Product

Illustration



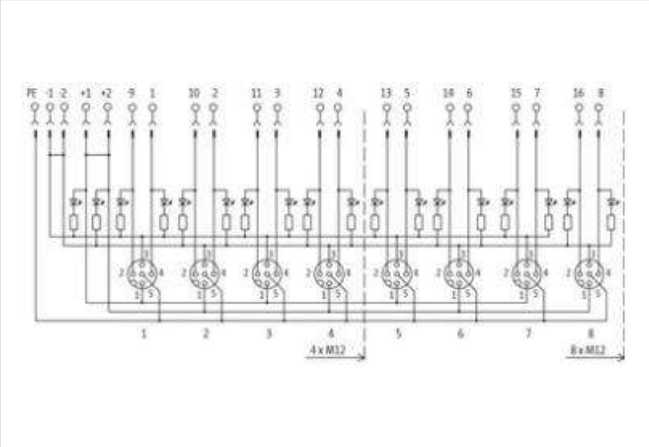

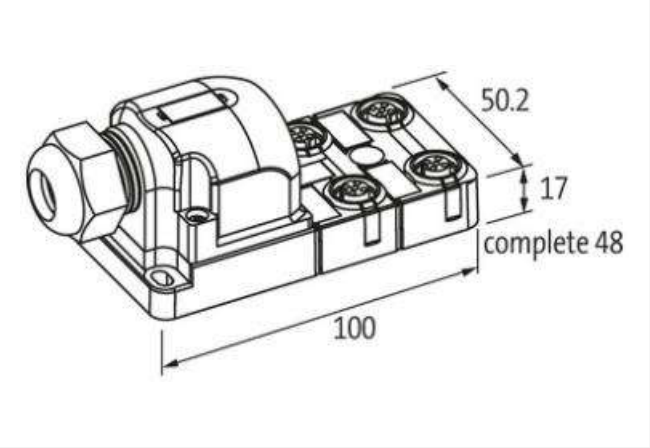

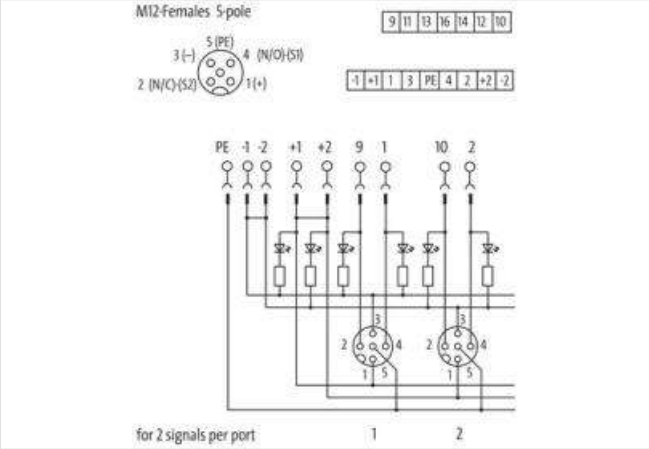

Product may differ from Image

Commercial data

ECLASS-6.0	27279219
ECLASS-6.1	27279219
ECLASS-7.0	27279219
ECLASS-8.0	27279219
ECLASS-9.0	27440108
ECLASS-10.1	27440111

The information in this Product-PDF has been compiled with the utmost care.
Liability for the correctness completeness and topicality of the information is restricted to gross negligence. Version: 2024-01-31

MURR ELEKTRONIK
stay connected

ECLASS-11.1	27440111
ECLASS-12.0	27440111
ETIM-5.0	EC002585
customs tariff number	85369010
GTIN	4048879055635
Packaging unit	1
Electrical data | Supply	
Operating voltage DC	24 V
Current operating per contact max.	4 A
Total current max.	8 A
Installation	
Connection cross section max.	1,5 mm²
AWG number max.	16
Installation | Connection	
Connection	Screw plug-in terminals
Device protection | Electrical	
Degree of protection (EN IEC 60529)	IP65, IP67
Device protection | Media	
Flame resistance	flame retardant
Mechanical data | Material data	
Material housing	Plastic
Environmental characteristics | Climatic	
Operating temperature min.	-20 °C
Operating temperature max.	70 °C
Connection type 2	
Family construction form	Cap
No. of poles	21
Family construction form	M12
Gender	female
Color contact carrier	black
Coding	A
No. of poles	5
PIN 1	+
PIN 2	NC S 2
PIN 3	-
PIN 4	NO S 1
PIN 5	PE

The information in this Product-PDF has been compiled with the utmost care.
Liability for the correctness completeness and topicality of the information is restricted to gross negligence. Version: 2024-01-31