LCD modules | Adding, 7 digits (DC) | 190



The single-channel count module type 190 for PCB mounting, with 2 voltage ranges (4.75 ... 15 and 9 ... 60 V DC) and large 7-digit LCD display, boasts a very wide temperature range.

This ensures the device is extremely robust and suitable for many application areas, even under the harshest operating conditions.

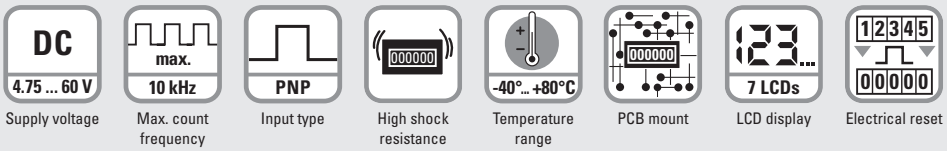

Powerful

- Count frequency up to 10 kHz.
- 7-digit LCD display, 6 mm high.
- Low operating current.
- Wide operating voltage and temperature range.
- Very high shock and vibration resistance.

Simple

- Non-volatile memory (no battery).
- Single channel count input.
- Electrical reset.
- Very high reliability.
- Small size and very competitive price.

Order no.

Supply voltage	*Order no.*	*Art. no.*
4.75 ... 15 V DC	**6.190.012.F00** [1]	162 135
9 ... 60 V DC	**6.190.012.G00**	162 136

Delivery specification
- LCD counter module type 190
- Operating instructions

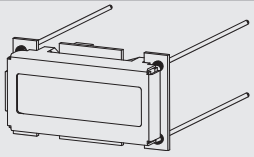

1) Stock types

© Fritz Kübler GmbH, subject to errors and changes. 03/2023

LCD modules | Adding, 7 digits (DC) | 190

Technical data

General technical data

Display	7 digits, LCD display, figure height 6 mm [0.24“]
Data backup	EEPROM
Memory	CMOS EEPROM non-volatile memory
data backup	up to 10 years
Operating temperature	-40 °C ... +80 °C [-40 °F ... +176 °F] (non-condensing)
Working temperature	-20 °C ... +80 °C [-4 °F ... +176 °F] (non-condensing)
Storage temperature	-50 °C ... +90 °C [-58 °F ... +194 °F]

Electrical characteristics

Supply voltage	4.75 ... 15 V DC with reverse polarity protection 9 ... 60 V DC
Current consumption	8 mA at 4.75 ... 15 V DC 6 mA at 9 ... 60 V DC
EMC standards	EN 55011 class B EN 61000-6-2, EN 61000-6-3, EN 61326-1

The module must be protected against inductive voltage spikes and high energy noise interference.

Mechanical characteristics

Housing dimensions	18.4 x 32.4 mm [0.72 x 1.28“]
color	black
Weight	approx. 8 g [0.28 oz]
Shock resistance acc. to EN 60068-2-27	550 m/s², 11 ms
Vibration resistance acc. to EN 60068-2-6	50 ... 200 m/s², 10 ... 80 Hz

Inputs

Count input	HIGH	4 ... 60 V DC
	LOW	0 ... 0.7 V DC
max. counting frequency		10 kHz, edge triggered (negative edge)
Reset input	HIGH	4 ... 60 V DC
	LOW	0 ... 0.7 V DC
pulse length		1 ms edge triggered (positive edge)

Approvals

CE compliant in accordance with	
EMC Directive	2014/30/EU
RoHS Directive	2011/65/EU
UKCA compliant in accordance with	
EMC Regulations	S.I. 2016/1091
RoHS Regulations	S.I. 2012/3032

Dimensions

Dimensions in mm [inch]

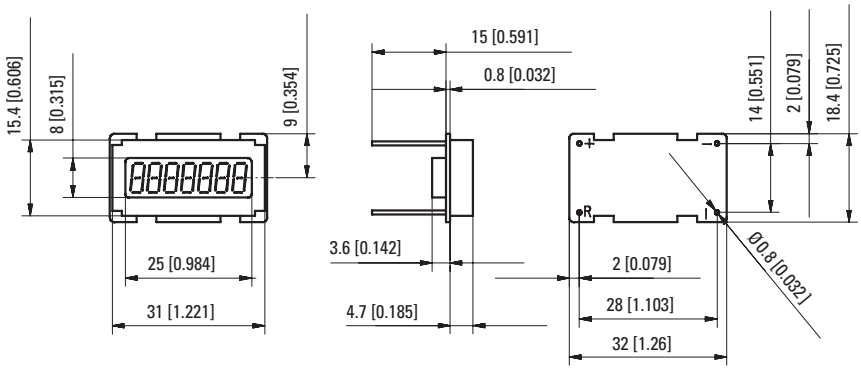

Terminal assignment

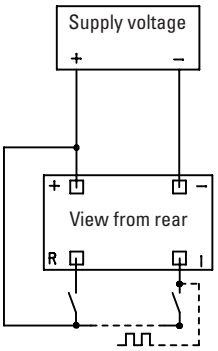

© Fritz Kübler GmbH, subject to errors and changes. 03/2023