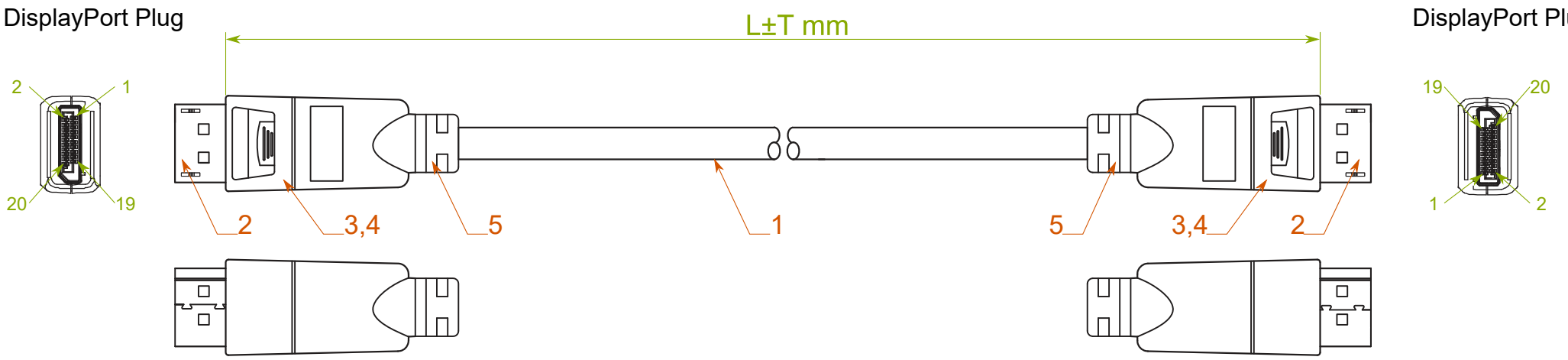

Pin Assignment

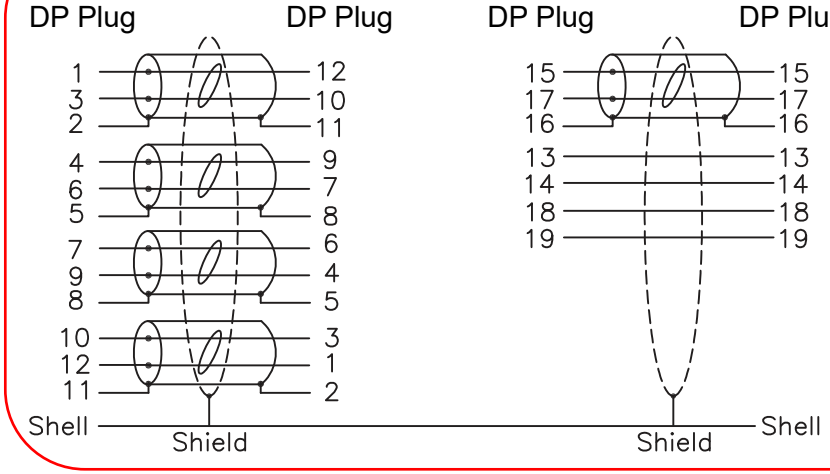

Feature:

Resolution: 3480x2160P @ 60Hz

Specification：

1. Cable	UL20276, [5P(28AWG)+4C(28AWG)] + ADB, Jacket Color: Black, OD: 7.3mm, LSOH
2. Conn.	DisplayPort Plug, Conductor: Gold Plated, Shell: Gold Plated
3. Hood	For DisplayPort Plug, Black ABS
4. Inner Molding	PE
5. Outer Molding	Black PVC: 45P

Part No.	Length
11.44.5812	3000±50 mm
11.44.5813	5000±50 mm

SECOMP

Issue Date : 2021/10/22

Product Name	ROLINE GREEN DisplayPort Cable, v1.4, DP - DP, M/M
Product No.	11.44.5812 / 11.44.5813

Approve	Check	Draw	Design
Allen	Allen	Kuan	Kuan

Scale 1:1 | Unit : mm

Rev.	Date	Contents of Change	Design
1			
2			
3			