

Model Number

NBB1,5-F79-E2

Features

- **Basic series**
- **1.5 mm embeddable**
- **3-wire DC**

Connection

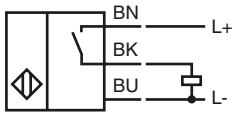

Dimensions

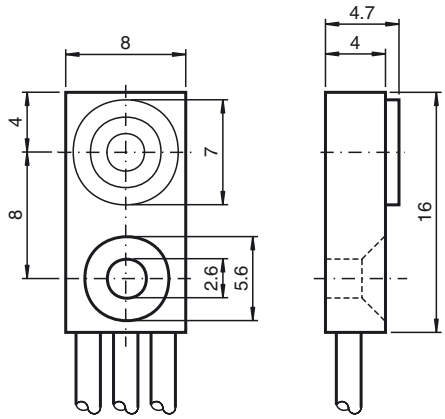

Technical Data

General specifications		
Switching element function		PNP NO
Rated operating distance	s_n	1.5 mm
Installation		embeddable
Output polarity		DC
Assured operating distance	s_a	0 ... 1.215 mm
Reduction factor r_{Al}		0.3
Reduction factor r_{Cu}		0.2
Reduction factor r_{304}		0.7
Nominal ratings		
Operating voltage	U_B	5 ... 30 V DC
Switching frequency	f	0 ... 1200 Hz
Hysteresis	H	typ. 5 %
Short-circuit protection		pulsing
Voltage drop	U_d	≤ 1.5 V
Operating current	I_L	0 ... 100 mA
Off-state current	I_r	≤ 10 µA
No-load supply current	I_0	≤ 15 mA
Functional safety related parameters		
$MTTF_d$		4830 a
Mission Time (T_M)		20 a
Diagnostic Coverage (DC)		0 %
Ambient conditions		
Ambient temperature		-25 ... 70 °C (-13 ... 158 °F)
Mechanical specifications		
Connection type		flexible leads PVC , 500 mm
Core cross-section		0.08 mm^2
Housing material		PA
Sensing face		PA
Protection degree		IP67
Compliance with standards and directives		
Standard conformity		
Standards		EN 60947-5-2:2007 IEC 60947-5-2:2007
Approvals and certificates		
UL approval		cULus Listed, General Purpose
CSA approval		cCSAus Listed, General Purpose
CCC approval		Products with a maximum operating voltage of ≤36 V do not bear a CCC marking because they do not require approval.

Release date: 2012-03-02 09:49 Date of issue: 2012-03-02 800001_eng.xml