E70599

AS-Interface flat cable insulation displacement connector

FC Splitter AS-i 5 m UL

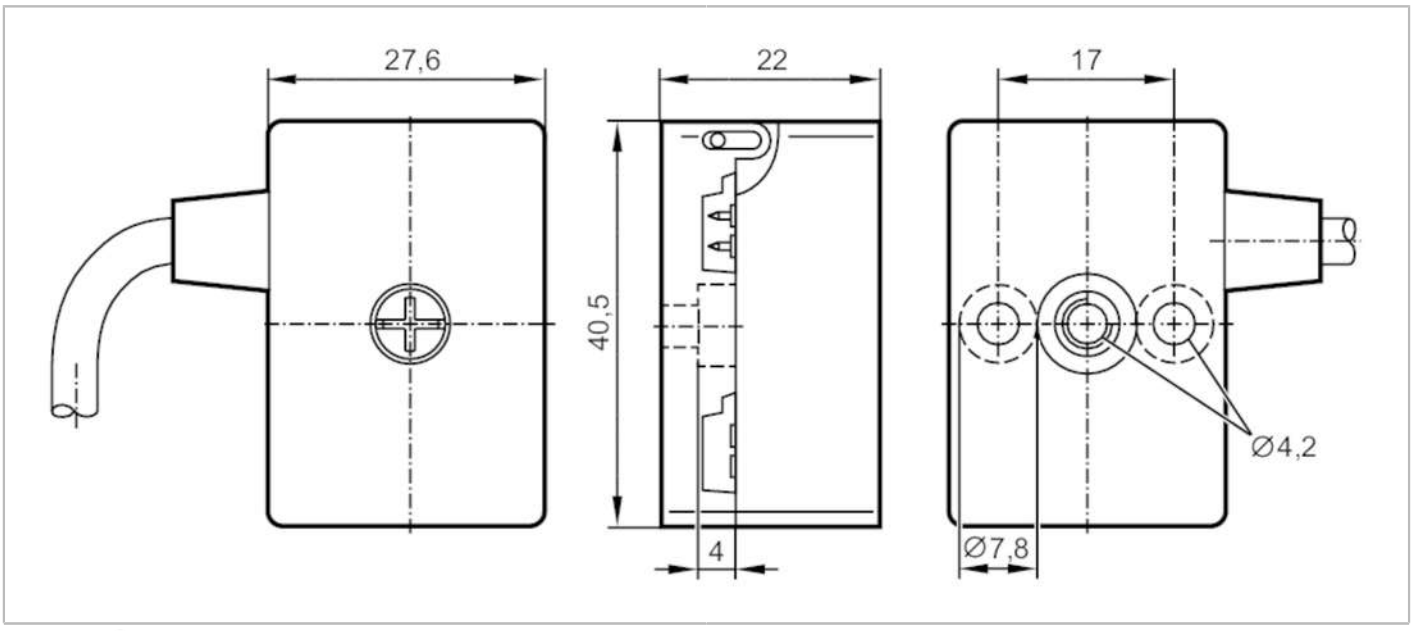

Electrical data		
Protection class		III
Max. current load per module/slot	[A]	4
Outputs		
Electrical design		AS-i
Operating conditions		
Ambient temperature	[°C]	-25...75
Protection		IP 67
Mechanical data		
Weight	[g]	182.8
Materials		housing: PBT / PC; screw: stainless steel (303/1.4305)
Tightening torque	[Nm]	< 1.65
Accessories		
Accessories (optional)		flat cable end seal:, E70413
		heat-shrink cap:, E70113
Remarks		
Remarks		The flat cable should not end in the splitter.
		Use a flat cable seal or heat-shrink cap for sealing.
Pack quantity		1 pcs.

E70599

AS-Interface flat cable insulation displacement connector

FC Splitter AS-i 5 m UL

Electrical connection

Cable: 5 m, Ø 4.3 mm; 2 x 0.5 mm²

Connection

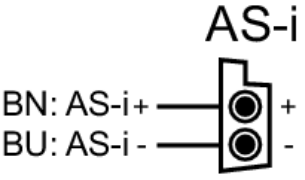

brown	AS-i +
blue	AS-i -