Brand of NTN corporation

Technical data

ESEHE204

Bearing units



Grey cast housing, radial insert ball bearing with eccentric locking collar, single lip seal

KIT CONTENT

ES204G2, EHE204

VISUAL (S)

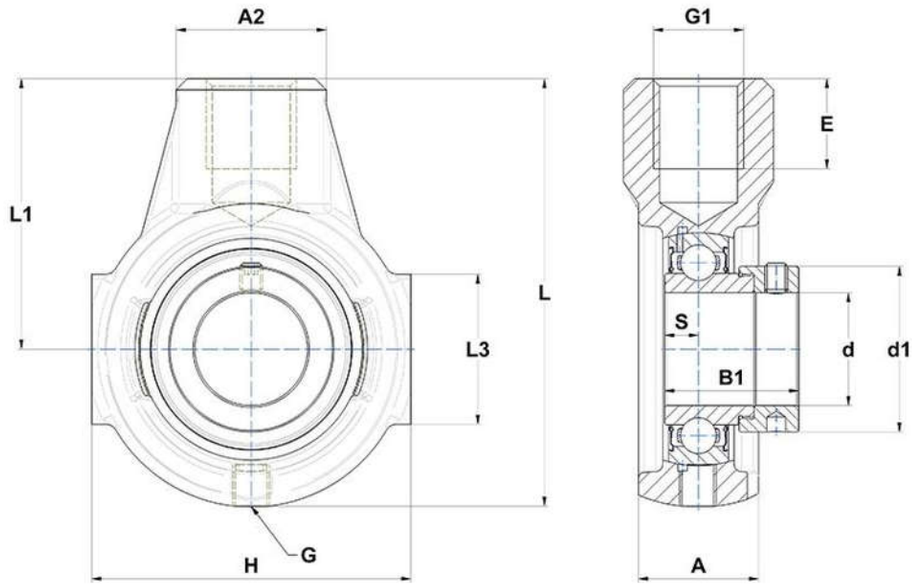

PRODUCT DEFINITION

Brand	SNR
A - Housing width	25 mm
A2	30 mm
B1 - Overall width Inner Ring	30,9 mm
d - Shaft diameter	20 mm
d1 - Outer dia of eccent. Lock. collar / nut of adapter sleeve	32,4 mm

ESEHE204
Bearing units

PRODUCT DEFINITION	
E - Mounting hole thread depth	21 mm
G - Grease fitting	R1/8"
G1 - Thread size	M16
H - Housing length, width or diameter	65 mm
L - Housing length	91 mm
L1 - Distance attachment end face to bearing centerline	58 mm
L3 - Length of guidance slot/face	38 mm
S - Distance front side/bearing centre	7,5 mm

PRODUCT PERFORMANCE	
C - Dynamic load rating	12800000 mN
C0 - Static load rating	6650000 mN
Operating temperature min.	253,15 °K
Operating temperature max.	373,15 °K

OTHER FEATURES	
Mass	0,55 kg
Recommended tightening torque for set screw	5.5 N-m