Accessories / LED Bulb

LED Bulb E27 24VAC/DC YE



Part No.: 956.320.75

MECHANICAL DATA	
Height	65 mm
Diameter	45 mm
Housing colour	Silver
Weight with packaging	36 g
Product weight	28 g

ELECTRICAL DATA	
Operating voltage	24V
Operating voltage type	AC/DC
Operating voltage frequency	50Hz
Operating voltage tolerance	+/- 10%
Rated operational voltage	24 VDC
Rated operational current	20 mA
Rated inrush current	500 mA

OPTICAL DATA	
Light source	LED
Light colour	Yellow
Service life optical	100,000 h maximum
Lamp fitting/socket	E27

APPROVAL DATA	
Conforms with CE	Yes
WEEE	No
Conforms with RED directive	No
Conforms with ATEX-directive	No
Conforms with CCC	No
Conforms with FCC	No
Conforms with IC	No
EAC certificate available	No
Conforms with AS-I	No
ICAO Certification	No
Conforms with DNV	No
Conforms with RoHS CN	No

! For additional installation and mounting information, refer to the appropriate user guide at www.werma.com. This printed copy is for information only and is subject to alteration.

Accessories / LED Bulb

LED Bulb E27 24VAC/DC YE

DRAWING

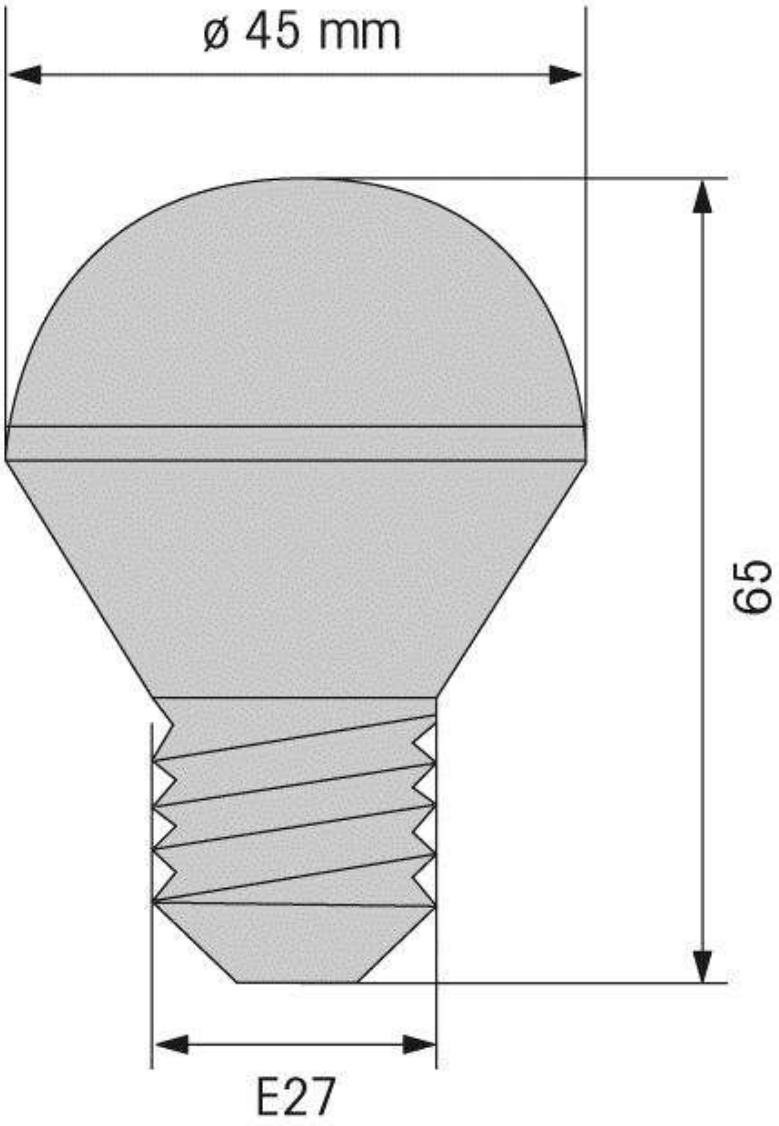

! For additional installation and mounting information, refer to the appropriate user guide at www.werma.com. This printed copy is for information only and is subject to alteration.