PT9550

Pressure transmitter

PT-400-SBG14-B-DVG/US/ /W

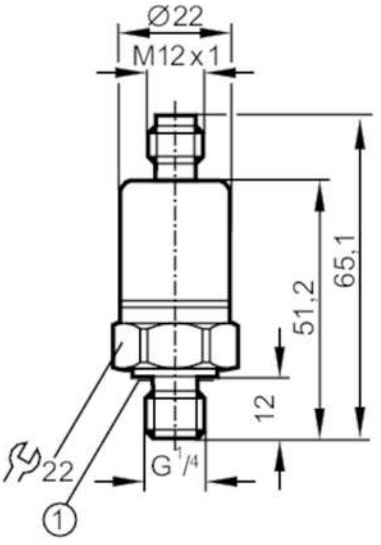

1 Sealing
Tightening torque 25 Nm

Product characteristics				
Number of inputs and outputs		Number of analogue outputs: 1		
Measuring range		0...400 bar	0...5800 psi	0...40 MPa
Process connection		threaded connection G 1/4 external thread		
Application				
Application		for mobile applications		
Media		liquids and gases		
Medium temperature	[°C]	-25...90; (on request: -40...100 °C)		
Min. bursting pressure		1600 bar	23200 psi	160 MPa
Pressure rating		600 bar	8700 psi	60 MPa
Type of pressure		relative pressure		
Electrical data				
Operating voltage	[V]	16...36 DC		
Current consumption	[mA]	< 6		
Min. insulation resistance	[MΩ]	100; (80 V DC)		
Protection class		III		
Reverse polarity protection		yes		
Inputs / outputs				
Number of inputs and outputs		Number of analogue outputs: 1		
Outputs				
Total number of outputs		1		
Output signal		analogue signal		
Number of analogue outputs		1		
Analogue voltage output	[V]	0...10		
Min. load resistance	[Ω]	2000		

PT9550

Pressure transmitter

PT-400-SBG14-B-DVG/US/ /W

Measuring/setting range			
Measuring range	0...400 bar	0...5800 psi	0...40 MPa
Accuracy / deviations			
Repeatability [% of the span]	< ± 0,1; (with temperature fluctuations < 10 K)		
Characteristics deviation [% of the span]	< ± 1,0; (incl. drift when overtightened, zero point and span error)		
Linearity deviation [% of the span]	< ± 0,25 (BFSL) / < ± 0,5 (LS)		
Hysteresis deviation [% of the span]	< ± 0,2		
Long-term stability [% of the span]	< ± 0,1; (per 6 months)		
Temperature coefficient zero point [% of the span / 10 K]	< ± 0,1; (-25...90 °C)		
Temperature coefficient span [% of the span / 10 K]	< ± 0,1; (-25...90 °C)		
Response times			
Step response time analogue output [ms]	8		
Operating conditions			
Ambient temperature [°C]	-25...90		
Storage temperature [°C]	-40...100		
Protection	IP 67; IP 69K		
Tests / approvals			
EMC	EN 61000-4-2 ESD	4 kV CD / 8 kV AD	
	immunity	according to the automotive directive 1995/54/EC, 2004/104 EC, 2005/83/EC	
	ISO 11452-2	100 V/m	
	ISO 11452-4	100 mA / severity level 4	
	ISO 7637-2	severity level 4	
	radiation of interference	CISPR 25	
	EN 61000-6-1		
	EN 61000-6-4		
Shock resistance	DIN IEC 68-2-27	50 g (11 ms)	
Vibration resistance	DIN IEC 68-2-6	20 g (10...2000 Hz)	
MTTF [years]	1069		
Pressure Equipment Directive	Sound engineering practice; can be used for group 2 fluids; group 1 fluids on request		
Mechanical data			
Weight [g]	83		
Housing	cylindrical		
Dimensions [mm]	Ø 22 / L = 65.1		
Materials	stainless steel (316L/1.4404); PA		
Materials (wetted parts)	stainless steel (316L/1.4404); FKM		
Min. pressure cycles	50 million		
Process connection	threaded connection G 1/4 external thread		

PT9550

Pressure transmitter

PT-400-SBG14-B-DVG/US/ /W

Restrictor element integrated	yes

Remarks

Remarks	BFSL = Best Fit Straight Line
	LS = limit value setting
Pack quantity	1 pcs.

Electrical connection

Connector: 1 x M12; coding: A



Connection

