Accessories
for tie-rod cylinders
KLI3

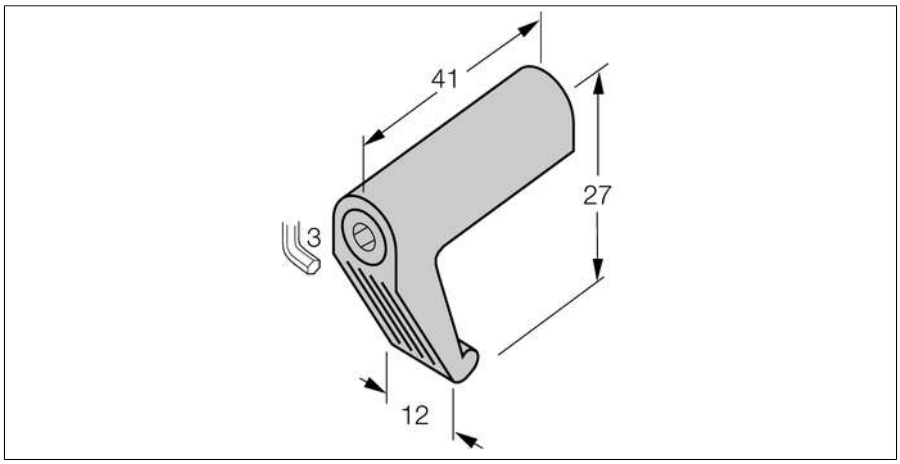

Mounting accessories for magnetic-inductive sensors for mounting on tie-rod cylinders with diameters of 63…160 mm, die-cast zinc

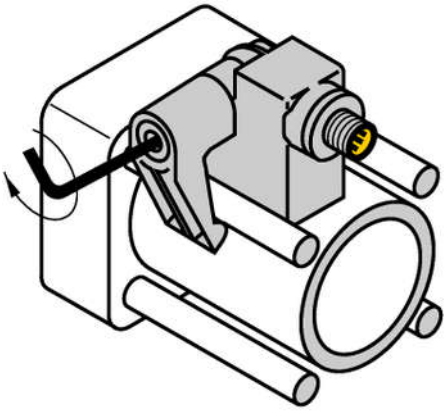

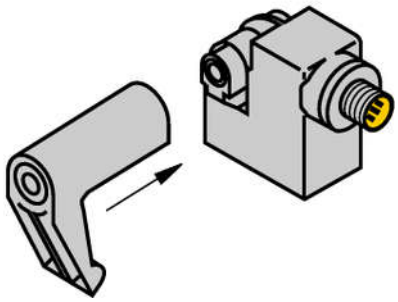

Type designation	KLI3
Ident no.	69712

Design	Accessories for rectangular sensor, IKE, IKT, IKM
Dimensions	41 x 27 x 12 mm
Housing material	Metal, GD-Zn
Fixing clamp for correspondent cylinder diameter	63 ... 160 mm
Clamping width min.	6 mm
Max.clamp width	16 mm

Edition • 2017-09-21T11:16:37+02:00

Hans Turck GmbH & Co.KG ● D-45472 Mülheim an der Ruhr ● Witzlebenstraße 7 ● Tel. 0208 4952-0 ● Fax 0208 4952-264 ● more@turck.com ● www.turck.com