Pressure sensor, Series PE5

R412010779

AVENTICS Series PE5 Pressure sensors

The AVENTICS Series PE5 is an electronic pressure sensor, which combines electronic precision and versatile functions with ideal user friendliness.



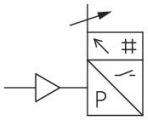

Technical information

Industry	Industrial
Output signal	PNP, NPN, push-pull, 1x IO-Link
Type	electronic
Operating pressure min	0 bar
Operating pressure max	10 bar
Protection against overpressure	15 bar
Operational voltage	17-30 V DC
Switching logic	NO/NC (adjustable)
Max. shock resistance	30 g
Vibration resistance	5 g (10 - 150 Hz)
Precision (% of full scale value)	± 0,2 %
Hysteresis	adjustable
Measurement	Relative pressure
Display	LCD display, 4 digits Color setting: green or red
Units displayed	bar psi kPa MPa inHg

Pressure sensor, Series PE5

R412010779

Compressed air connection	G 1/4
Compressed air connection type	Internal thread
Min. medium temperature	0 °C
Max. medium temperature	60 °C
Medium	Compressed air (max. 40 µm)
Certificates	CE declaration of conformity cULus RoHS Conforms with REACH Free of substances that impair surface wetting in the coating process
Electrical connection type	Plug
Electrical connection size	M12x1
Electrical connection number of poles	4-pin
Min. ambient temperature	0 °C
Max. ambient temperature	60 °C
Max. oil content of compressed air	40 mg/m³
Switching time	< 5 ms
Resetting point	adjustable 0 ... 100%
Switching point	adjustable 0 ... 100%
Quiescent current consumption	<40 mA
Delayed hysteresis	adjustable
Analog output linearity	<± 0.5% of the final value
Maximum load (analog current output)	600 Ω
Protection class	IP65 IP67 with connections assembled
Short circuit resistance	Max. 600 ohms (current output) Min. 3K ohms (voltage output)
Mounting types	Directly on hat rail and wall mounting For panel installation using mounting kit via double nipple
Weight	0.04 kg

Material

Housing material	Polycarbonate
Seal material	Acrylonitrile butadiene rubber
Material electrical connection	Aluminum
Part No.	R412010779

Technical information

Alternative pressure connection (G1/4) on the rear side (closed with plug)

Display color selectable, red or green

The pressure dew point must be at least 15 °C less than ambient and medium temperature and may not exceed 3 °C.

The oil content of compressed air must remain constant during the life cycle.

Use only the approved oils from AVENTICS. Further information can be found in the “Technical information” document (available in https://www.emerson.com/en-us/support).

Internal thread

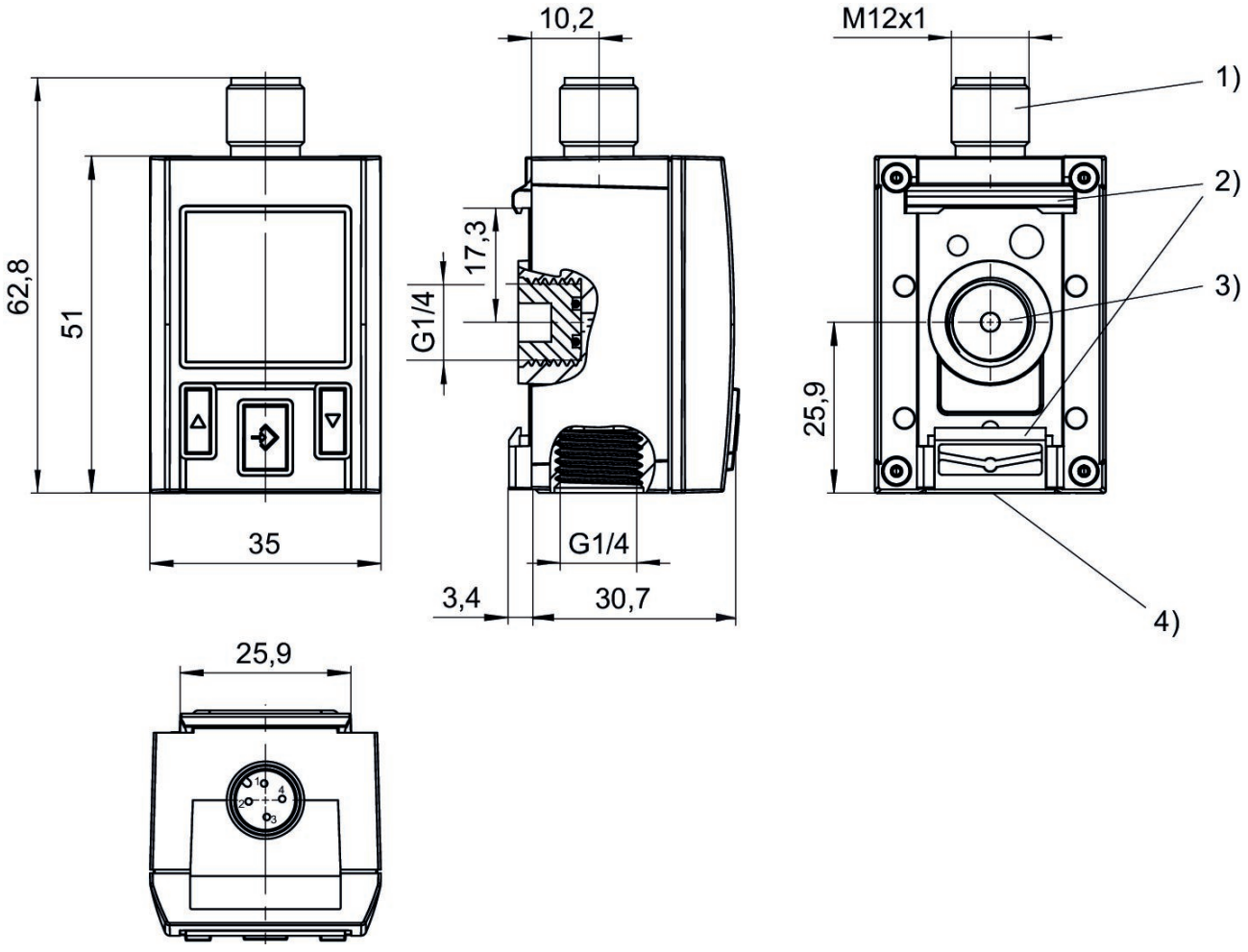

1) M12x1 electrical connection
2) Mounting for hat rail and wall mounting
3) Alternative pressure connection (G1/4) closed with plug
4) Pressure connection G1/4

Display and operation area

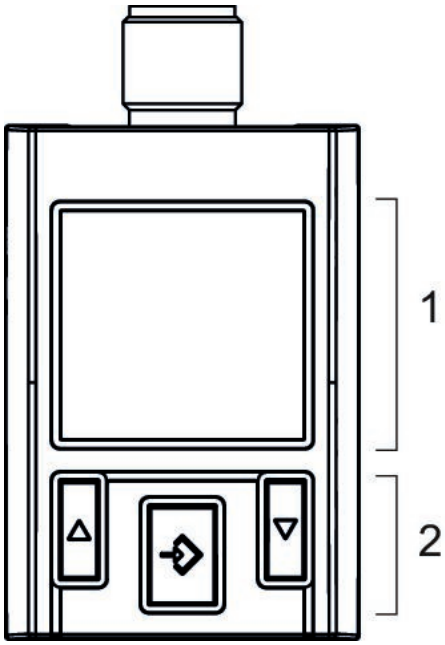

1) LCD display
2) Control panel with 3 buttons

Operating mode
Push-pull

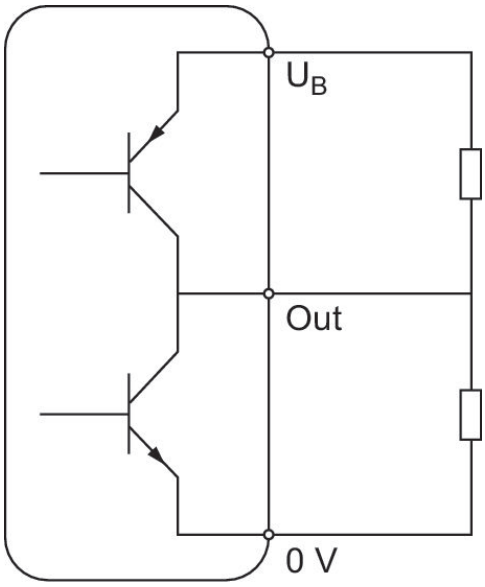

Operating mode
NPN

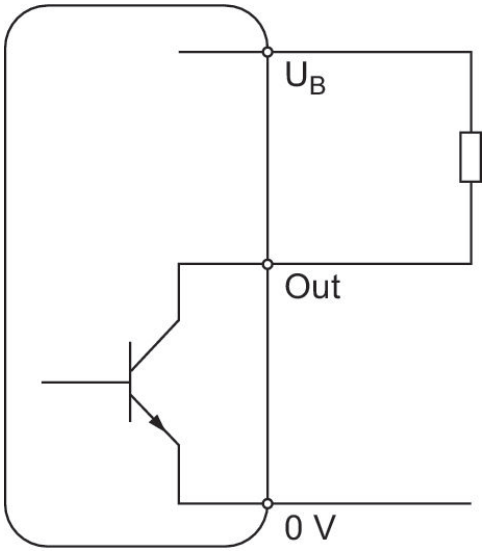

Operating mode
PNP

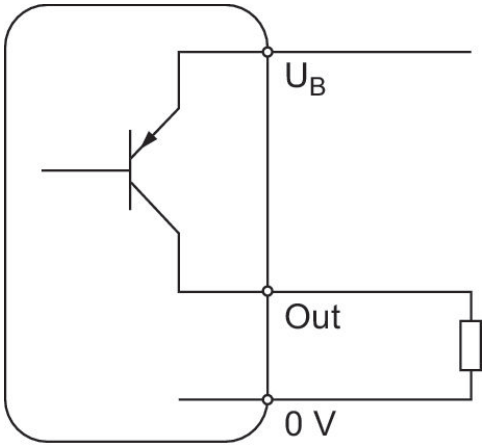

Hysteresis function: switching and resetting behavior dependent on pressure p and time t

In case of underpressure

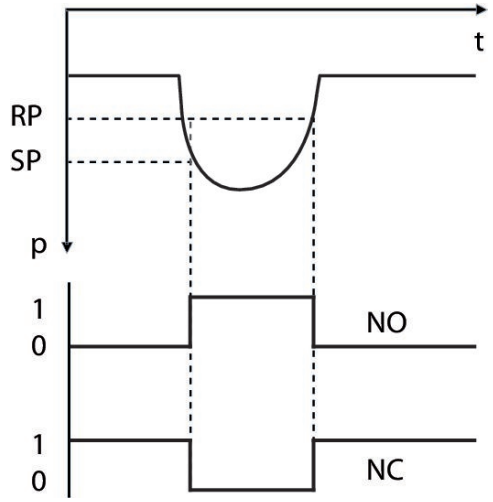

Hysteresis function: switching and resetting behavior dependent on pressure p and time t

In case of overpressure

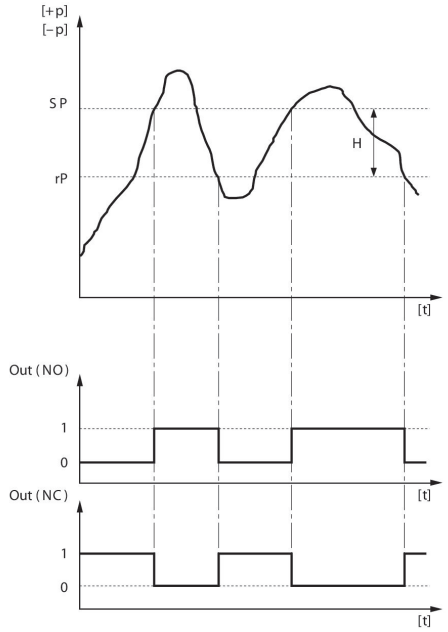

H: Hysteresis
SP = switching point RP = resetting point
Out (NC): switch output, break contact Out (NO): switch output, make contact

Delayed hysteresis function: switching and resetting behavior depending on pressure p and time t

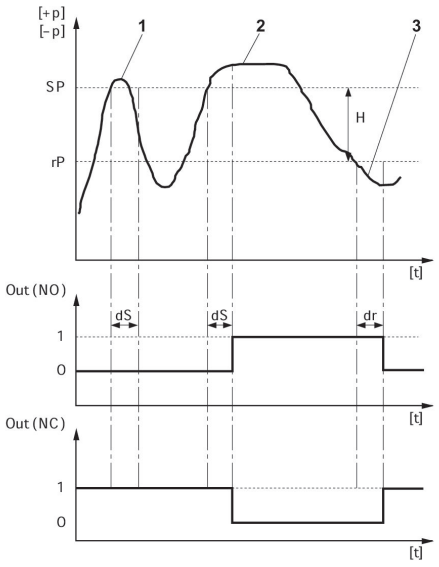

H: Hysteresis
SP = switching point RP = resetting point
Out (NC): switch output, break contact Out (NO): switch output, make contact
dS: switching delay dR = reset delay
1) period of pressure over the switching point < dS: pressure sensor does not switch 2) Period of pressure over the switching point > dS: pressure sensor switches 3) Period of pressure under the resetting point > dR: pressure sensor switches

Window function: switching and resetting behavior depending on pressure p and time t

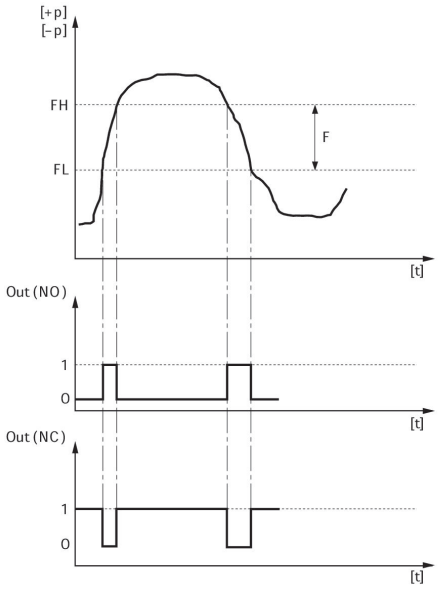

FH: pressure band, upper value
FL: pressure band, lower value
Out (NC): switch output, break contact Out (NO): switch output, make contact

Block diagram

1x PNP and 1x analog

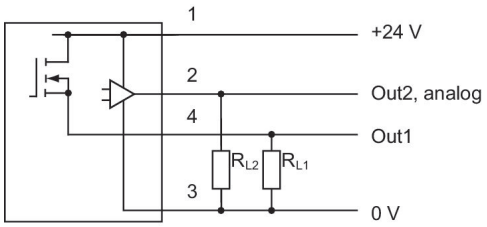

RL = storable postion

Block diagram

1x NPN and 1x analog

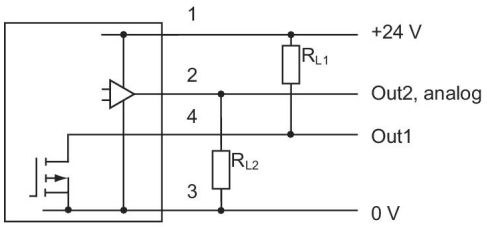

RL = storable postion

Pin assignments
M12x1
4-pin

