SIEMENS

Data sheet 3VA5215-1BB31-0AA0



molded case switch 3VA5 UL frame 250 max. sh-circ breaking capacity 100kA @ 480V 3-pole, line protection MCS110, In=150A without overload protection self-protection Ii=16 x In without connection

Model	
product brand name	SENTRON
product designation	Molded-case circuit breaker
product designation / according to UL file	CFAS
design of the product	Molded case switch
design of the load switch / according to UL 489 / Heating, Air Conditioning, and Refrigeration circuit breaker (HACR Type)	Yes
design of the load switch / according to UL 489 / High-Intensity-Discharge circuit breaker (HID Type)	No
design of the load switch / according to UL 489 / Switching Duty circuit breaker (SWD Type)	No
design of the overcurrent release	MCS110
protection function of the overcurrent release	I
number of poles	3
General technical data	
insulation voltage / rated value	800 V
operating voltage / at DC / rated value	750 V
operating voltage / at AC / rated value	690 V
power loss [W] / maximum	19.6 W
power loss [W] / for rated value of the current / at AC / in hot operating state / per pole	6.53 W
mechanical service life (operating cycles) / typical	20 000
electrical endurance (operating cycles) / at AC-1 / at 380/415 V	8 000
electrical endurance (operating cycles) / at AC-1 / at 690 V	4 000
electrical endurance (operating cycles) / at 480 V	8 000
electrical endurance (operating cycles) / at 600 V	4 000
product feature / for neutral conductors / upgradable/retrofittable / short-circuit and overload proof	No
product function	
● communication function	No
● other measurement function	No
Net Weight	1.999 kg
Current	
marking / according to UL 489 / 100%-rated breaker	No
operational current	
● at 40 °C	150 A
● at 45 °C	150 A
● at 50 °C	150 A
● at 55 °C	150 A
● at 60 °C	150 A
● at 65 °C	150 A
● at 70 °C	150 A

Subject to change without notice
© Copyright Siemens

Switching capacity according to IEC 60947	
design of short-circuit protection	For switching power values in DC networks, see the 3VA molded case circuit breaker device manual; link to be found under Service & Support in the last chapter
Adjustable parameters	
adjustable response value setting current (Ii) / for I-tripping	
● minimum	2 400 A
● maximum	2 400 A
adjustable setting current (InN) / for N-tripping	
● minimum	0 A
● maximum	0 A
product function / grounding protection	No
Mechanical Design	
product component	
● undervoltage release	No
● voltage trigger	No
● trip indicator	No
height [in]	7.28 in
height	185 mm
width [in]	4.13 in
width	105 mm
depth [in]	3.27 in
depth	83 mm
Connections	
arrangement of electrical connectors / for main current circuit	Without connection
type of electrical connection / for main current circuit	Without
Auxiliary circuit	
number of CO contacts / for auxiliary contacts	0
Accessories	
product extension / optional / motor drive	Yes
Environmental conditions	
protection class IP / on the front	IP40
ambient temperature	
● during operation / minimum	-25 °C
● during operation / maximum	70 °C
● during storage / minimum	-40 °C
● during storage / maximum	80 °C
reference code / according to IEC 81346-2	Q

Approvals / Certificates

General Product Approval

Confirmation

General Product Approval | **EMV** | **Marine / Shipping** | **other**

Miscellaneous

Miscellaneous

other | **Environment**

Confirmation | Miscellaneous | Environmental Confirmations

Subject to change without notice
© Copyright Siemens

Further information

Information on the packaging
https://support.industry.siemens.com/cs/ww/en/view/109813875
Information- and Downloadcenter (Catalogs, Brochures,…)
http://www.siemens.com/lowvoltage/catalogs
Industry Mall (Online ordering system)
https://mall.industry.siemens.com/mall/en/en/Catalog/product?mlfb=3VA5215-1BB31-0AA0
Service&Support (Manuals, Certificates, Characteristics, FAQs,...)
https://support.industry.siemens.com/cs/ww/en/ps/3VA5215-1BB31-0AA0
Image database (product images, 2D dimension drawings, 3D models, device circuit diagrams, ...)
http://www.automation.siemens.com/bilddb/cax_en.aspx?mlfb=3VA5215-1BB31-0AA0
CAx-Online-Generator
http://www.siemens.com/cax
Tender specifications
http://www.siemens.com/specifications

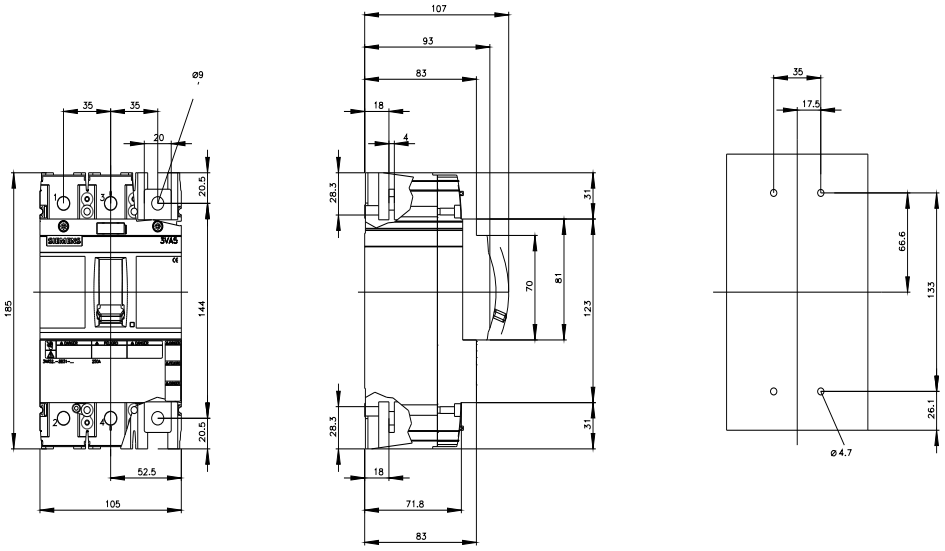

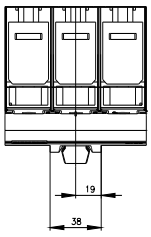

Subject to change without notice
© Copyright Siemens

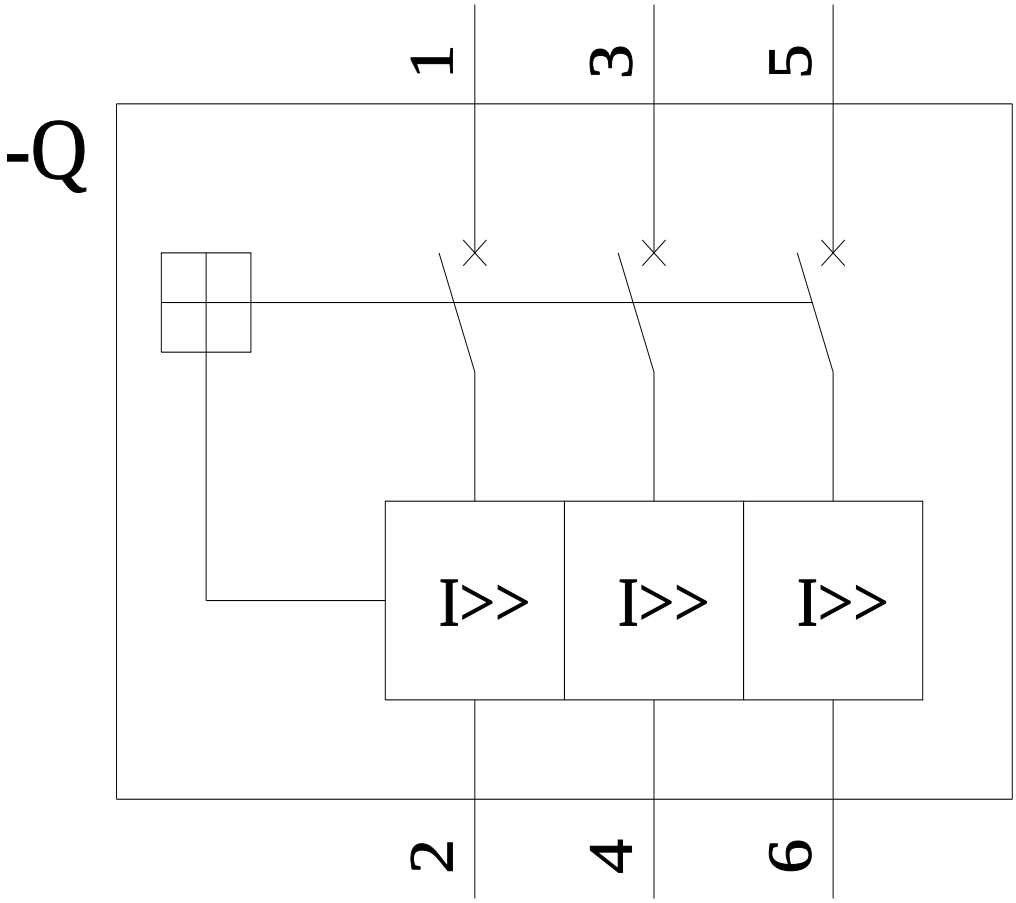

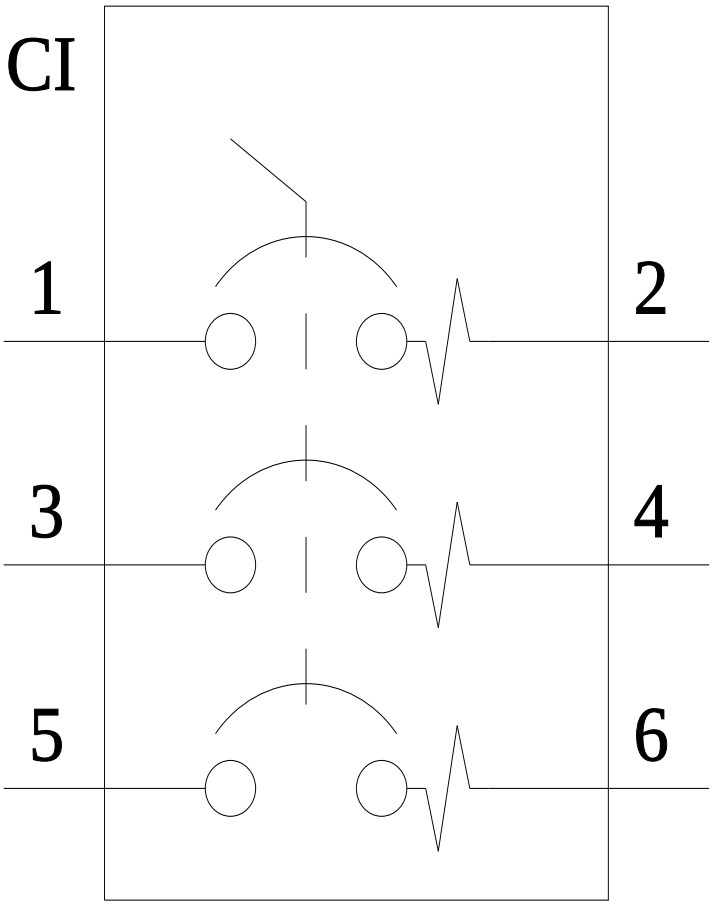

last modified: 6/16/2022

Subject to change without notice
© Copyright Siemens

Subject to change without notice
© Copyright Siemens