# RAFIX 22 FS+, compact keylock switch, round collar, frontring metallic silver, 1 x 90°, shape L, latching, key removal position 0



### fields of application

- Measurement-control-regulation
- Electrical engineering
- Mechanical and system engineering
- Vehicle construction
- Handheld terminals
- Industrial robots

### special features

- Key switch with low installation height
- Low installation depth 9.2 mm (PCB) or 27 mm (QC)
- Connection types: printed circuit board connection (PCB) or plug-in connection (QC)
- PCB switching elements minimize mounting errors
- Switching elements with silver contacts (max. 250 V/4 A) or gold contacts (max. 35 V/100 mA)
- Design adaptation through different front ring variations
- Degree of protection: IP 65 at the front
- Two collar shapes: round and square

## description

RAFIX control devices are defined at RAFI as modular elements, consisting of an actuating element, if necessary a coupling and an individual contact or lighting unit.

Actuating elements (such as pushbuttons, emergency stop actuators, etc.) have the intended tactility, reset and function only when assembled with the appropriate switching elements.

The locking systems we use have been created by reputable lock manufacturers in accordance with the DIN EN 1303 standard. They are open, mechanical systems that require occasional maintenance by the operator depending on the ambient conditions.

Further locking positions or functions are available on request.

## technical data

**general**

| | |
|---|---|
| Disassembly possible | no |
| Scope of delivery | 2 keys |
| Front ring color | metallic silver |
| Collar shape | round |
| Operating temperature, min. | -25 °C |
| Operating temperature, max. | 70 °C |

### direct links

- RAFI eCatalog

The information in this data sheet only contains general descriptions and / or performance features, which may not apply precisely as described to the respective application, and which my change due to further product enhancements. The technical data, illustrations and other information about our products are the mere results of individual technical testing. These descriptions and other product features are only binding if they expressly agreed upon at the time of the conclusion of a binding contract. In all other cases, we reserve the right to make technical changes as well as changes of availability. Pictures and other graphic illustrations are approximations only. All product names may be trademarks or brand names of the RAFI Group or any other sub-supplier of RAFI. The use of such by any third parties for their own purposes may infringe the rights of the respective entity holding those rights.


**RAFI GmbH & Co. KG**

Ravensburger Str. 128-134
88276 Berg / Ravensburg
Germany
www.rafi-group.com,
info.headquarters@rafi-group.com

| | |
|---|---|
| Storage temperature, min. | -40 °C |
| Storage temperature, max. | 80 °C |
| illuminated | No |
| Packaging | Box |
| Packaging unit | 2 pcs. |
| net weight | 39.6 g |
| Operating life | 50,000 cycles |
| B10 | 65,000 cycles |
| Degree of protection, front side, according to DIN EN 60529 | IP65 |
| UL Enclosure Type Rating front side | type 1<br>type 4X indoor |
| Environment resistance | IEC 60068-2-14<br>IEC 60068-2-30<br>IEC 60068-2-33<br>IEC 60068-2-78 |
| Salt-spray resistance according to standard | IEC 60068-2-11 |
| MOQ order | 10 pcs. |
| RoHS compliant | Yes |
| REACH compliant | Yes |

**mounting diameters**

| | |
|---|---|
| Outside dimension, length | 29.8 mm |
| Outside dimension, width | 29.8 mm |
| Outside dimension, height | 28.6 mm |
| Mounting hole | 22.3 mm |
| Mounting depth | 9.2 mm |
| Installation height | 20 mm |
| Grid, min. | 30 x 30 mm |
| Collar dimension | ø 29,8 mm |

**mechanical data**

| | |
|---|---|
| Actuation function | latching |
| Operating torque, max. | 1.3 Nm |
| Locking position | 019 |
| Key removal position | 0 |
| Rotating angle | 1 x 90°, shape L |
| Fixing | Threaded ring |
| Threaded ring torque, max. | 1.2 Nm |

The information in this data sheet only contains general descriptions and / or performance features, which may not apply precisely as described to the respective application, and which my change due to further product enhancements. The technical data, illustrations and other information about our products are the mere results of individual technical testing. These descriptions and other product features are only binding if they expressly agreed upon at the time of the conclusion of a binding contract. In all other cases, we reserve the right to make technical changes as well as changes of availability. Pictures and other graphic illustrations are approximations only. All product names may be trademarks or brand names of the RAFI Group or any other sub-supplier of RAFI. The use of such by any third parties for their own purposes may infringe the rights of the respective entity holding those rights.


**RAFI GmbH & Co. KG**

Ravensburger Str. 128-134
88276 Berg / Ravensburg
Germany
www.rafi-group.com,
info.headquarters@rafi-group.com

## drawings

### Dimensioned drawing

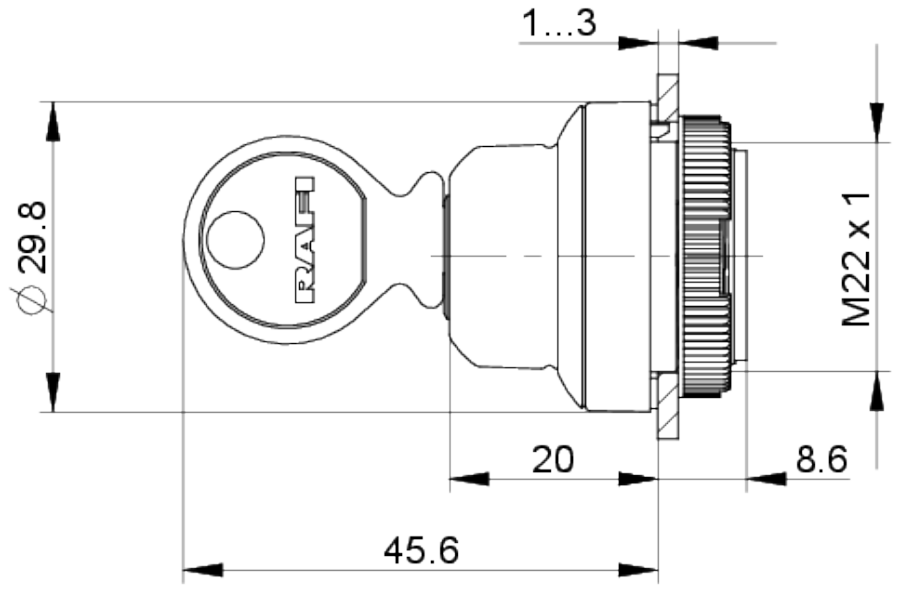


### System drawing

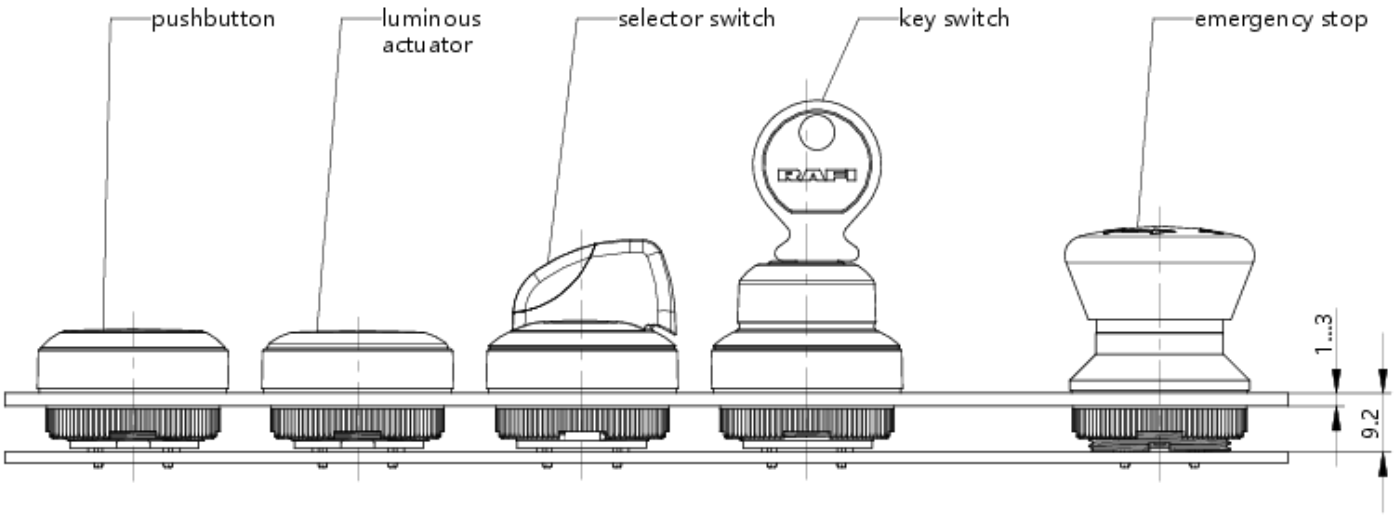


The information in this data sheet only contains general descriptions and / or performance features, which may not apply precisely as described to the respective application, and which my change due to further product enhancements. The technical data, illustrations and other information about our products are the mere results of individual technical testing. These descriptions and other product features are only binding if they expressly agreed upon at the time of the conclusion of a binding contract. In all other cases, we reserve the right to make technical changes as well as changes of availability. Pictures and other graphic illustrations are approximations only. All product names may be trademarks or brand names of the RAFI Group or any other sub-supplier of RAFI. The use of such by any third parties for their own purposes may infringe the rights of the respective entity holding those rights.


**RAFI GmbH & Co. KG**

Ravensburger Str. 128-134
88276 Berg / Ravensburg
Germany
www.rafi-group.com,
info.headquarters@rafi-group.com

## System drawing

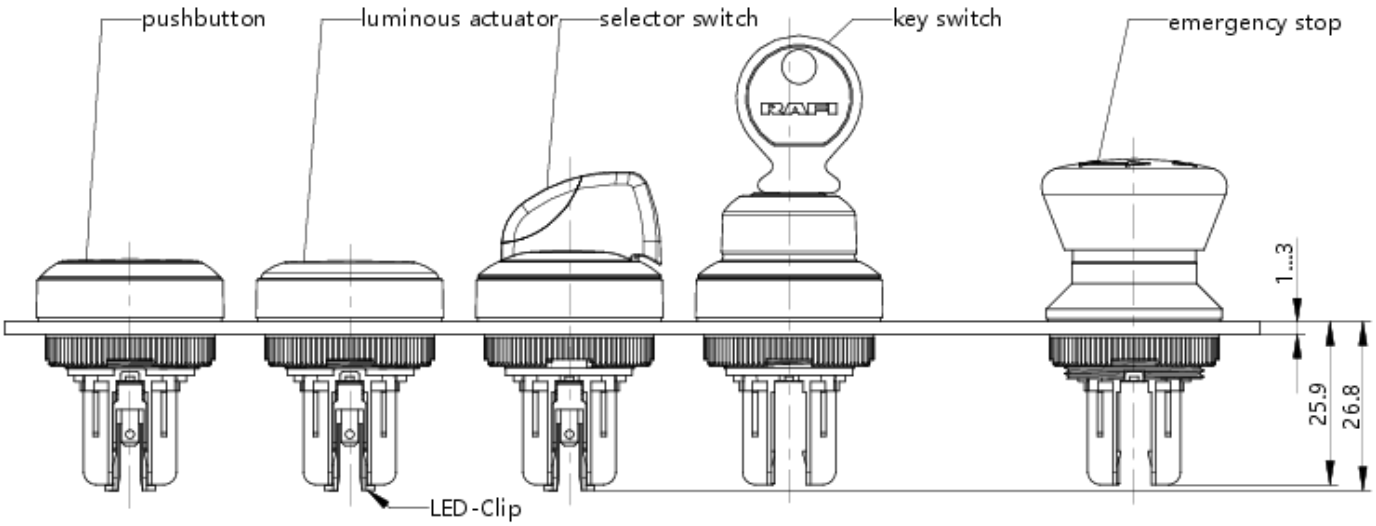


## Mounting hole drawing

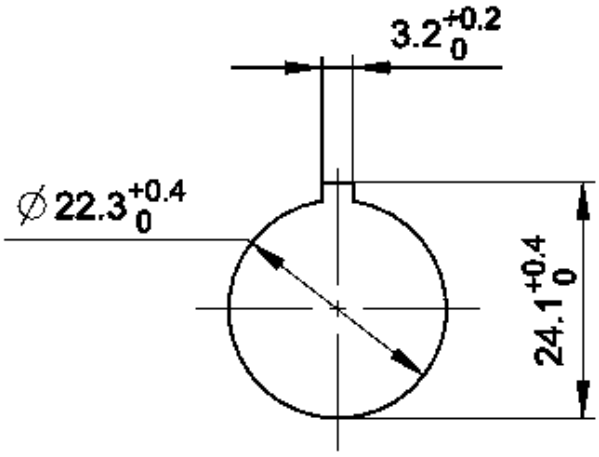


acc. to IEC 60947-5-1

The information in this data sheet only contains general descriptions and / or performance features, which may not apply precisely as described to the respective application, and which my change due to further product enhancements. The technical data, illustrations and other information about our products are the mere results of individual technical testing. These descriptions and other product features are only binding if they expressly agreed upon at the time of the conclusion of a binding contract. In all other cases, we reserve the right to make technical changes as well as changes of availability. Pictures and other graphic illustrations are approximations only. All product names may be trademarks or brand names of the RAFI Group or any other sub-supplier of RAFI. The use of such by any third parties for their own purposes may infringe the rights of the respective entity holding those rights.


**RAFI GmbH & Co. KG**

Ravensburger Str. 128-134
88276 Berg / Ravensburg
Germany
www.rafi-group.com,
info.headquarters@rafi-group.com

## front panel drawing

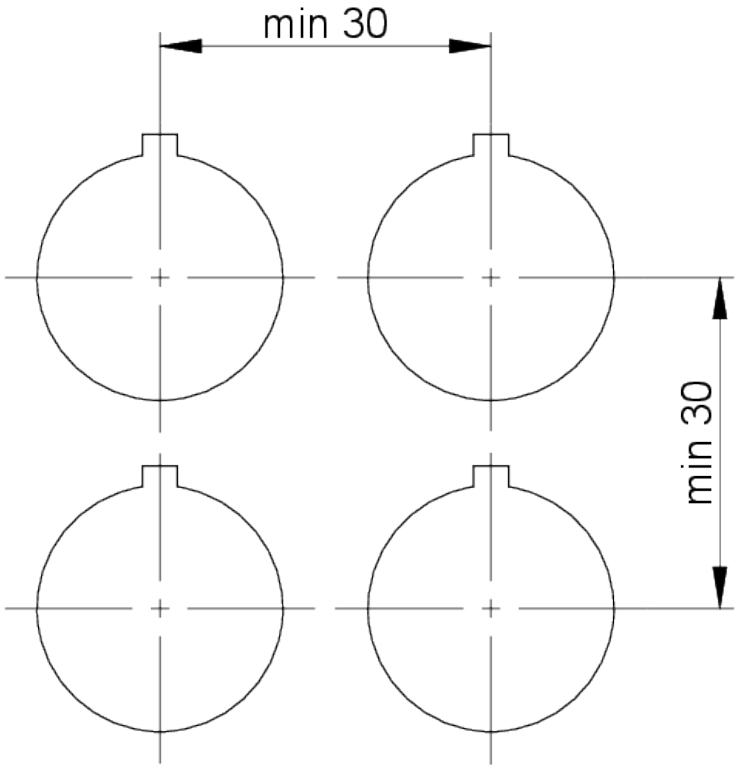


The information in this data sheet only contains general descriptions and / or performance features, which may not apply precisely as described to the respective application, and which my change due to further product enhancements. The technical data, illustrations and other information about our products are the mere results of individual technical testing. These descriptions and other product features are only binding if they expressly agreed upon at the time of the conclusion of a binding contract. In all other cases, we reserve the right to make technical changes as well as changes of availability. Pictures and other graphic illustrations are approximations only. All product names may be trademarks or brand names of the RAFI Group or any other sub-supplier of RAFI. The use of such by any third parties for their own purposes may infringe the rights of the respective entity holding those rights.


**RAFI GmbH & Co. KG**

Ravensburger Str. 128-134
88276 Berg / Ravensburg
Germany
www.rafi-group.com,
info.headquarters@rafi-group.com