DATASHEET - M22-PV



Emergency stop/emergency switching off pushbutton, RMQ-Titan, Mushroom-shaped, 38 mm, Non-illuminated, Pull-to-release function, Red, yellow, RAL 3000

Part no.	**M22-PV**
Catalog No.	**216876**
Alternate Catalog No.	**M22-PVQ**
EL-Nummer (Norway)	**4355321**

Delivery program

Product range			RMQ-Titan
Basic function			Controlled stop pushbuttons/emergency-stop buttons
Single unit/Complete unit			Single unit
Design			Mushroom-shaped
Diameter	∅	mm	38
Illumination			Non-illuminated
Approval			DGUV Test ET 16107 Sicherheit geprüft tested safety
			Pull-to-release function
Description			Tamper-proof according to ISO 13850/EN 418
Colour			
Mushroom head			Red
			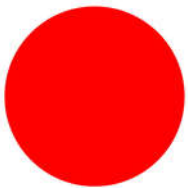
Base			yellow
			RAL 3000
Degree of Protection			IP66, IP69
Connection to SmartWire-DT			no
Front dimensions			35
Instructions			Max. number of contacts: four M22-(C)K01, …10 or two M22-(C)K02, …20, …11

Technical data

General

Standards			IEC/EN 60947 VDE 0660
Lifespan, mechanical	Operations	x 10^6	> 0.1
Operating frequency	Operations/h		≦ 600
Actuating force		n	≦ 50
Climatic proofing			Damp heat, constant, to IEC 60068-2-78 Damp heat, cyclic, to IEC 60068-2-30
Degree of Protection			IP66, IP69
Ambient temperature			
Open		°C	-25 - +70
Mounting position			As required
Mechanical shock resistance		g	50 Shock duration 11 ms

			Sinusoidal according to IEC 60068-2-27
shipping classification			DNV GL LR
			

Design verification as per IEC/EN 61439

Technical data for design verification			
Rated operational current for specified heat dissipation	I_n	A	0
Heat dissipation per pole, current-dependent	P_{vid}	W	0
Equipment heat dissipation, current-dependent	P_{vid}	W	0
Static heat dissipation, non-current-dependent	P_{vs}	W	0
Heat dissipation capacity	P_{diss}	W	0
Operating ambient temperature min.		°C	-25
Operating ambient temperature max.		°C	70
IEC/EN 61439 design verification			
10.2 Strength of materials and parts			
10.2.2 Corrosion resistance			Meets the product standard's requirements.
10.2.3.1 Verification of thermal stability of enclosures			Meets the product standard's requirements.
10.2.3.2 Verification of resistance of insulating materials to normal heat			Meets the product standard's requirements.
10.2.3.3 Verification of resistance of insulating materials to abnormal heat and fire due to internal electric effects			Meets the product standard's requirements.
10.2.4 Resistance to ultra-violet (UV) radiation			Please enquire
10.2.5 Lifting			Does not apply, since the entire switchgear needs to be evaluated.
10.2.6 Mechanical impact			Does not apply, since the entire switchgear needs to be evaluated.
10.2.7 Inscriptions			Meets the product standard's requirements.
10.3 Degree of protection of ASSEMBLIES			Does not apply, since the entire switchgear needs to be evaluated.
10.4 Clearances and creepage distances			Meets the product standard's requirements.
10.5 Protection against electric shock			Does not apply, since the entire switchgear needs to be evaluated.
10.6 Incorporation of switching devices and components			Does not apply, since the entire switchgear needs to be evaluated.
10.7 Internal electrical circuits and connections			Is the panel builder's responsibility.
10.8 Connections for external conductors			Is the panel builder's responsibility.
10.9 Insulation properties			
10.9.2 Power-frequency electric strength			Is the panel builder's responsibility.
10.9.3 Impulse withstand voltage			Is the panel builder's responsibility.
10.9.4 Testing of enclosures made of insulating material			Is the panel builder's responsibility.
10.10 Temperature rise			Not applicable.
10.11 Short-circuit rating			Is the panel builder's responsibility. The specifications for the switchgear must be observed.
10.12 Electromagnetic compatibility			Is the panel builder's responsibility. The specifications for the switchgear must be observed.
10.13 Mechanical function			The device meets the requirements, provided the information in the instruction leaflet (IL) is observed.

Technical data ETIM 7.0

Low-voltage industrial components (EG000017) / Front element for mushroom push-button (EC001038)			
Electric engineering, automation, process control engineering / Low-voltage switch technology / Command and alarm device / Front element for mushroom push-button actuators (ecl@ss10.0.1-27-37-12-12 [AKF030014])			
Colour button			Red
Construction type lens			Round

Diameter cap	mm	38
Hole diameter	mm	22.5
Width opening	mm	0
Height opening	mm	0
Degree of protection (IP)		IP66
Degree of protection (NEMA)		4X
Type of button		Flat
Suitable for illumination		No
Switching function latching		Yes
Spring-return		No
With front ring		No
Material front ring		Other
Colour front ring		Other
Suitable for emergency stop		Yes
Unlocking method		Pull-release

Approvals

Product Standards	IEC/EN 60947-5; UL 508; CSA-C22.2 No. 14-05; CSA-C22.2 No. 94-91; CE marking
UL File No.	E29184
UL Category Control No.	NKCR
CSA File No.	012528
CSA Class No.	3211-03
North America Certification	UL listed, CSA certified
Degree of Protection	UL/CSA Type 3R, 4X, 12, 13

Dimensions

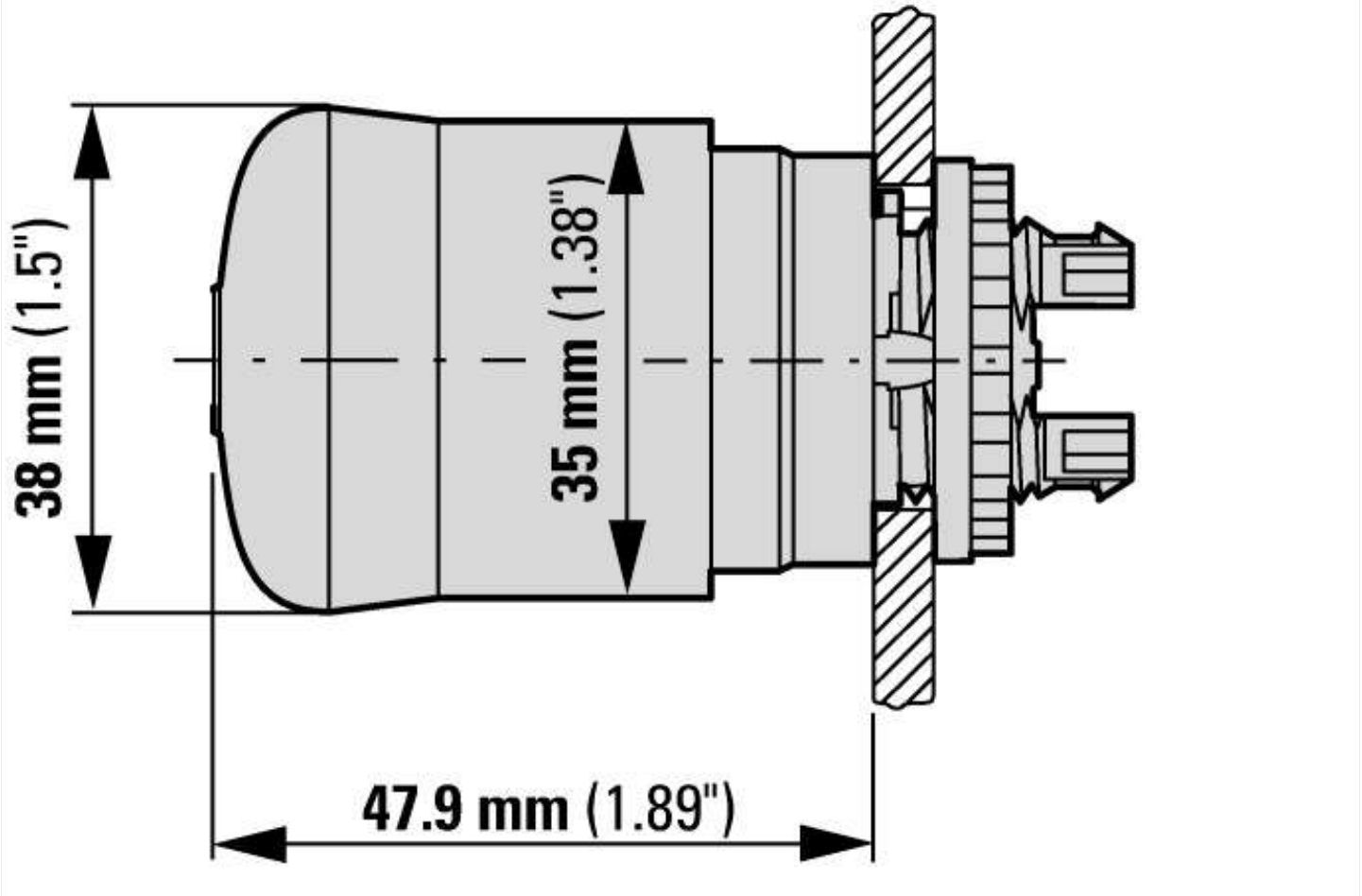

Assets (links)

Declaration of CE Conformity

00003255

Instruction Leaflets

IL04716005Z2018_07

© 10/2019 by Eaton Industries GmbH