Assembly and operating instructions
Peristaltic Pump
DULCOflex DF4a

EN



Please carefully read these operating instructions before use. · Do not discard.

986513, 5, en_GB, © 2026 Original operating instructions (2006/42/EC)

Supplemental directives

General non-discriminatory approach

In order to make it easier to read, this document uses the male form in grammatical structures but with an implied neutral sense. The document is always aimed equally at women, men and gender-neutral persons. We kindly ask readers for their understanding in this simplification of the text.

Supplementary information

Please read the supplementary information in its entirety.

Information



This provides important information relating to the correct operation of the unit or is intended to make your work easier.

Warning information

Warning information includes detailed descriptions of the hazardous situation, see ➦ *Chapter 3.1 'Labelling of Warning Information' on page 9*.

The following symbols are used to highlight instructions, links, lists, results and other elements in this document:

Tab. 1: More symbols

Symbol	Description
1.	Action, step by step.
⇨	Outcome of an action.
	Links to elements or sections of these instructions or other applicable documents.
	List without set order.
[Button]	Display element (e.g. indicators). Operating element (e.g. button, switch).
'Display/GUI'	Screen elements (e.g. buttons, assignment of function keys).
CODE	Presentation of software elements and/or texts.

Table of contents

1 About this product. 4
1.1 Nameplate. 4
1.2 Construction and functional description. 5
1.3 Overview of equipment and control elements. 6
2 Identity code. 7
3 Safety section. 9
3.1 Labelling of Warning Information. . 9
3.2 User qualification. 10
3.3 General safety information. 11
3.4 Intended use. 11
4 Storage and transport. 12
4.1 Storage. 12
4.2 Transport. 12
4.3 Packaging material. 12
5 Assembly and installation. 13
5.1 Dimensional drawing. 14
5.2 Assembly. 15
5.3 Installation, hydraulic. 15
5.4 Installation, electrical. 16
5.4.1 Opening the housing. 16
5.4.2 Preparing for mains connection (equipment without mains plug). . 17
5.4.3 Additional connections. 18
5.4.4 Close the housing. 20
6 Commissioning. 21
7 Setting. 23
7.1 Control unit. 23
7.1.1 LCD display. 24
7.1.2 LED. 24
7.1.3 Control keys. 25
7.2 Continuous displays. 27
7.2.1 Chemical pump. 27
7.2.2 Active carbon pump or flocculant pump. 28
7.2.3 Setting options for the continuous display. 29
7.3 Operating menu. 30
7.3.1 Operating menu overview. 32
7.3.2 Modifying the operating mode (*'MODE'* menu). 34
7.3.3 Changing parameters (*'SET'* menu) 34
7.3.4 Changing the configuration (*'CONFIG'* menu). 37
7.3.5 Service menu (*'SERVICE'* menu). . . 38
7.3.6 Reading system information (*'INFO'* menu). 39
7.3.7 Security-relevant settings (*'SECURITY'* menu). 39
7.3.8 Calibrating the pump (CALIBRATION menu). 40
8 Operation. 42
9 Maintenance. 43
10 Troubleshooting. 47
10.1 Errors without error messages. 48
10.2 Faults with error messages. 48
10.3 Warning with error message. 49
10.4 All other faults. 49
11 Decommissioning and disposal. 50
11.1 Used parts disposal/Declaration of Decontamination. 50
12 Technical data. 52
12.1 Performance data. 52
12.2 Precision. 52
12.3 Dimensions and weights. 53
12.4 Material specifications. 53
12.5 Ambient conditions. 53
12.6 Degree of protection and safety requirements. 54
12.7 Electrical data. 54
12.8 Sound pressure level. 56
13 Ordering information for spare parts/ accessories. 57
14 Declaration of Conformity for Machinery. 58
15 Overview of setting parameters. 59
16 Supplementary information to the DF4a operating instructions. 63
16.1 About this pump. 63
16.2 Control elements. 63
16.3 Functional description. 63
16.4 Electrical installation. 63
16.5 Set-up. 64
16.6 Troubleshooting. 64
16.7 Accessories. 65
17 Index. 67

1 About this product

The target group

The assembly and operating instructions for the peristaltic pump DULCO®flex DF4a are targeted at people who, at the very least, have the qualifications of a trained person, see ➦ *Chapter 3.2 'User qualification' on page 10*. Should higher qualifications be necessary, then this fact is described at the start of a chapter.

Assembly and operating instructions

The printed version of the assembly and operating instructions is naturally not updated. We would therefore ask you to regularly visit the manufacturer's homepage www.prominent.com to find out about the new electronic versions of the assembly and operating instructions. These versions may contain, among other things, information about new fault remedies or spare parts.

The peristaltic pump

The peristaltic pump DULCO®flex DF4a is a pump designed for metering liquids. The feed chemical is pumped by the rotor squeezing on the hose. No valves are needed for this, which ensures gentle handling of the feed chemical.



Fig. 1: DULCO®flex DF4a

Typical applications include processes where only a low feed pressure is required.

The metering pump features several inputs for setting the capacity. The step motor means that the capacity can be set continuously variably.

The key features:

- Capacity range 0.5 – 12 l/h, 4 ... 2 bar.
- PharMed® hose material.
- Step motor, speed-controlled.
- Continuously variable adjustment of the capacity either manually or externally via contacts or analogue signal 0/4 ... 20 mA and 0 ... 10 V.
- Priming function (high-speed run).
- Spring-mounted rollers for uniform roller pressure and increased service life of the hose.
- Selectable capacity adjustment, e.g. increase as required or night set-back.
- Capacity appears on the display in l/h.
- Reverse direction of rotation, among other things useful for backflushing.
- Housing degree of protection IP 65.

1.1 Nameplate

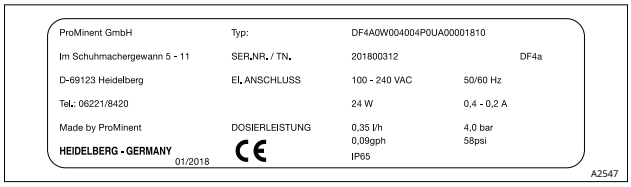

Fig. 2: Nameplate

The nameplate provides information on:

- Manufacturer with address and phone number
- Place and country of origin,
- Manufacturing date in week/year
- Type of pump with identity code *[Type]*,
- Electrical connection *[EL. ANSCHLUSS]* in Volts / Hertz, watts and amps
- Serial number *[SER.NR. / TN.]*
- Capacity *[DOSIERLEISTUNGLEISTUNG]* in bar and psi and/or l/h and gph
- *[IP65]* degree of protection.

1.2 Construction and functional description

The pump comprises three main components:

- Drive unit (step motor)
- Liquid end (rotor, rollers and pump hose)
- Control unit

The pump features a plastic housing. The plastic housing comprises an upper and lower part, which are screwed together. The lower part contains the PCBs for the motor control. The upper part of the housing accommodates the motor and display PCB with display and keys.

The liquid end is mounted at the front and is sealed by a screw-on transparent cover. The pump hose can easily be replaced after the transparent cover has been removed.

The step motor drives the rotor. Two spring-mounted rollers at the ends of the rotor press against the pump housing. The pump hose runs along the inner curve of the dosing head.

The rotary movement of the rotor alternately presses and releases the rollers in relation to the pump hose. The liquid is drawn in by suction and pumped into the pressure hose.

The pump is operated by the control unit. The required metering level and operating mode are set on the control unit. Metering is controlled by the control unit or by an external contact, level and/or pause input.

1.3 Overview of equipment and control elements

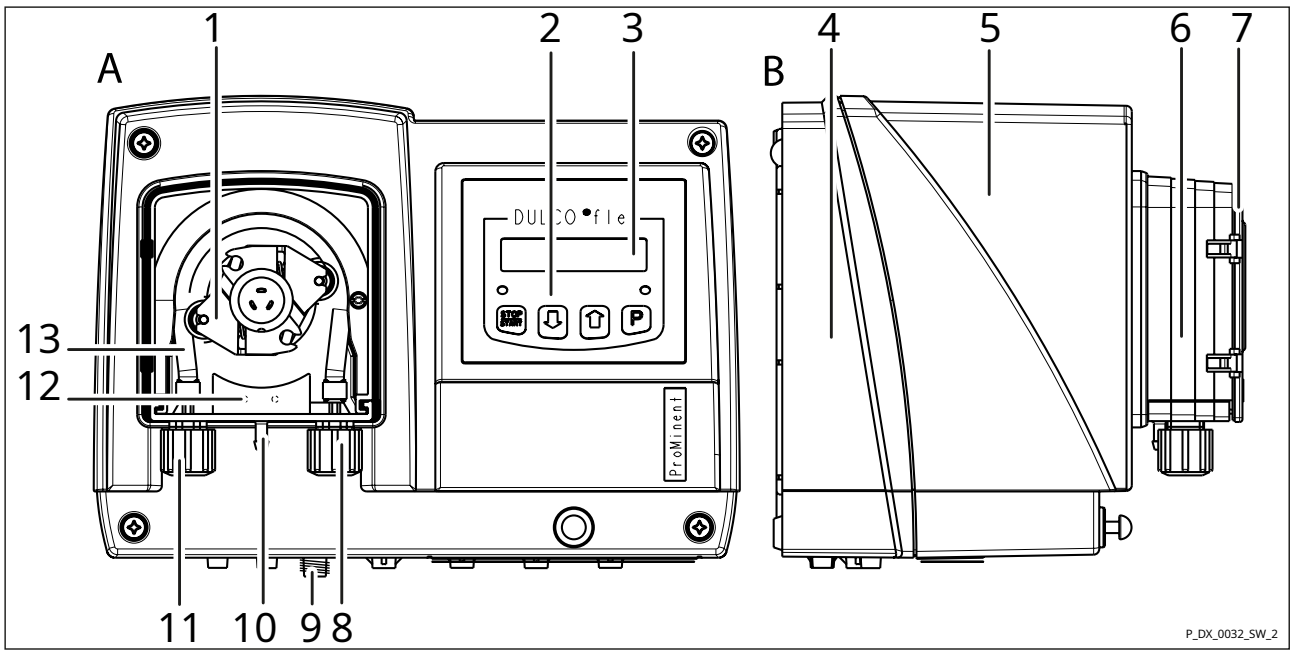

Fig. 3: Overview of DF4a equipment. A) Front view, B) Side view / Functional plug for "Level" socket

1 Rotor
2 Control keys
3 LCD display
4 Housing lower part
5 Housing upper part
6 Liquid end
7 Transparent cover
8 Pressure connector
9 "Level" socket, if required with functional plug for the "Level" socket
10 Leakage fitting with end cap
11 Suction connector
12 Hose rupture monitoring device
13 Pump hose

2 Identity code

Product range DULCO®flex DF4a										
DF4a	**Applications**									
	0	Chemical pump								
	A	Metering of active carbon								
	F	Metering of flocculants								
		Installation type								
		W	Wall-mounted							
			Design							
			0	with ProMinent® logo						
			1	without ProMinent® logo						
				Type	**Pump capacity**					
					bar	**l/h**				
				04004	4.0	0.35				
				04015	4.0	1.50				
				03060	2.5	6.00				
				02120	2.0	12.00				
					Hose material					
					P	PharMed®				
						Hydraulic connector				
						0	Standard			
						9	Special connection 10x4 discharge side			
							Operating voltage			
							U	100 - 240 VAC, 50/60 Hz		
								Cable and plug		
								0	without cable	
								1	with cable 2 m; open end	
								A	with 2 m cable; standard European plug	
								B	with 2 m cable; standard Swiss plug	
									Accessories	
									0	no accessories
									2	with lip-seal metering valve PCB and 10 m PE metering line
										Hardware extension

Product range DULCO®flex DF4a																		
										0	none							
											Default language							
											00	language-neutral						
												Relay						
												1	Fault indicating relay (N/C)					
												3	Fault indicating relay (N/O)					
													Control version					
													0	manual + external contact				
													2	manual + external contact and analogue 0/4-20 mA				
													8	manual + external contact and analogue 0/4-20 mA + 0-10 V				
													C	as 8 and CANopen				
													D	as 8 and CANopen and CAN connector				
														Additional inputs				
														1	Pause + 2-stage level + AUX_1			
														2	Pause + 1-stage level + AUX_1 + AUX_2			
															Pause/level			
															0	Pause N/C + level N/C		
																Certification		
																01	CE mark	

3 Safety section

3.1 Labelling of Warning Information

Introduction

These operating instructions provide information on the technical data and functions of the product. These operating instructions provide detailed warning information and are provided as clear step-by-step instructions.

The warning information and notes are categorised according to the following scheme. A number of different symbols are used to denote different situations. The symbols shown here serve only as examples.



DANGER

Nature and source of the danger

Consequence: Fatal or very serious injuries.

Measure to be taken to avoid this danger.

Description of hazard

– Denotes an immediate threatening danger. If the situation is disregarded, it will result in fatal or very serious injuries.



WARNING

Nature and source of the danger

Possible consequence: Fatal or very serious injuries.

Measure to be taken to avoid this danger.

– Denotes a possibly hazardous situation. If the situation is disregarded, it could result in fatal or very serious injuries.



CAUTION

Nature and source of the danger

Possible consequence: Slight or minor injuries. Material damage.

Measure to be taken to avoid this danger.

– Denotes a possibly hazardous situation. If the situation is disregarded, it could result in slight or minor injuries. May also be used as a warning about material damage.



NOTICE

Nature and source of the danger

Damage to the product or its surroundings.

Measure to be taken to avoid this danger.

– Denotes a possibly damaging situation. If the situation is disregarded, the product or an object in its vicinity could be damaged.



Type of information

Hints on use and additional information.

Source of the information. Additional measures.

- *Denotes hints on use and other useful information. It does not indicate a hazardous or damaging situation.*

3.2 User qualification



WARNING

Danger of injury with inadequately qualified personnel

The operator of the system / equipment is responsible for ensuring that all qualifications are complied with. If inadequately qualified personnel work on the equipment or loiter in the hazard zone of the equipment, this could result in dangers that could cause serious injuries and material damage.

- Ensure that all work on the equipment is therefore only performed by qualified personnel.
- Keep unqualified personnel away from the hazard zone.

All pertinent accident prevention regulations, as well as all other generally acknowledged safety regulations, must be adhered to.

Training	Definition
Instructed person	An instructed person is deemed to be a person who has been instructed and, if required, trained in the tasks assigned to them and possible dangers that could result from improper behaviour, as well as having been instructed in the required protective equipment and protective measures.
Trained user	A trained user is a person who fulfils the requirements expected of an instructed person and who has also received additional training specific to the system from the manufacturer or another authorised distribution partner.
Trained, qualified employee	A trained, qualified employee is deemed to be a person who is able to assess the tasks assigned to them and recognise possible hazards based on their training, knowledge and experience, as well as knowledge of the pertinent regulations. A trained, qualified employee must be able to perform the tasks assigned to them independently with the assistance of drawing documentation and parts lists. The assessment of a person's technical training can also be based on several years of work in the relevant field.
Electrical technician	An electrical technician is able to complete work on electrical systems and recognise and avoid possible dangers independently based on their technical training and experience as well as knowledge of the pertinent standards and regulations. An electrical technician must be able to perform the tasks assigned to them independently with the assistance of drawing documentation, parts lists, terminal and circuit diagrams. The electrical technician must be specifically trained for the working environment in which they are employed and be conversant with the relevant standards and regulations.
Service	Service refers to service technicians, who have received proven training and have been authorised by the manufacturer to work on the system.

3.3 General safety information

Safety information



WARNING

Danger from hazardous substances!

Possible consequence: fatal or very serious injuries.

When handling hazardous substances, please ensure that you have read the latest material safety data sheets provided by the manufacturer of the hazardous substances. The measures required are described in the material safety data sheet. Check the material safety data sheet regularly and replace it, if necessary, as the hazard potential of a substance can be re-evaluated at any time based on new findings.

The system operator is responsible for ensuring that the material safety data sheets are available and that they are kept up to date, as well as for producing an associated hazard assessment for the workplaces affected.



CAUTION

Warning of feed chemical spraying around

Feed chemical can spray out of the hydraulic components if they are tampered with or opened due to pressure in the liquid end and adjacent parts of the system.

- The pump is not designed to meter gaseous media or solids.
- Never use the pump outdoors without additional protection (outer housing, weather protection roof).
- Only allow trained and authorised personnel to operate the pump.
- You have a duty to observe the information contained in the operating instructions during the different phases of the unit's service life.

Safety equipment

The transparent cover on the liquid end protects personnel from the rotating rotor and prevents feed chemical escaping in the event of a hose rupture.

Information in the event of an emergency

In the event of an emergency, disconnect the mains plug or press the emergency stop switch.

If feed chemical escapes, ensure that the hydraulic environment around the pump is also at atmospheric pressure. Refer to the material safety data sheet for the feed chemical.

3.4 Intended use

- Only use the pump to meter liquid feed chemicals.
- Only use the system in accordance with the technical data and specifications outlined in the operating instructions.
- Only use the pump if it has been correctly installed and started up.
- All other uses or modifications are prohibited.

4 Storage and transport

4.1 Storage

User qualification: instructed user, see ➦ *Chapter 3.2 'User qualification' on page 10*

Permissible ambient temperature: - 10 °C ... +55 °C.

Humidity: maximum 95% relative air humidity, non-condensing.

Other ambient conditions: No dust, no direct sunlight.

4.2 Transport

Only transport the sensor in its original packaging and in compliance with the permissible environmental conditions. No further special conditions have to be observed in relation to transport.

4.3 Packaging material

Dispose of packaging material in an environmentally responsible way. All packaging components carry the corresponding recycling code ♻.

5 Assembly and installation

- User qualification: trained qualified personnel or electrical technician, ➥ *Chapter 3.2 'User qualification' on page 10*

WARNING

Carry out mechanical and hydraulic assembly work before commencing the electrical installation.

Outdoors

The unit is resistant to normal atmospheres in plant rooms.

Always use a housing or weatherproof cover when operating the unit outdoors.

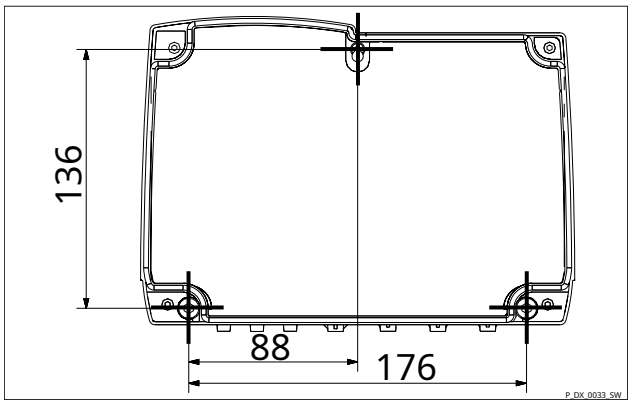

Fig. 4: DF4a drilling points - dimensions in mm (not true to scale).

5.1 Dimensional drawing

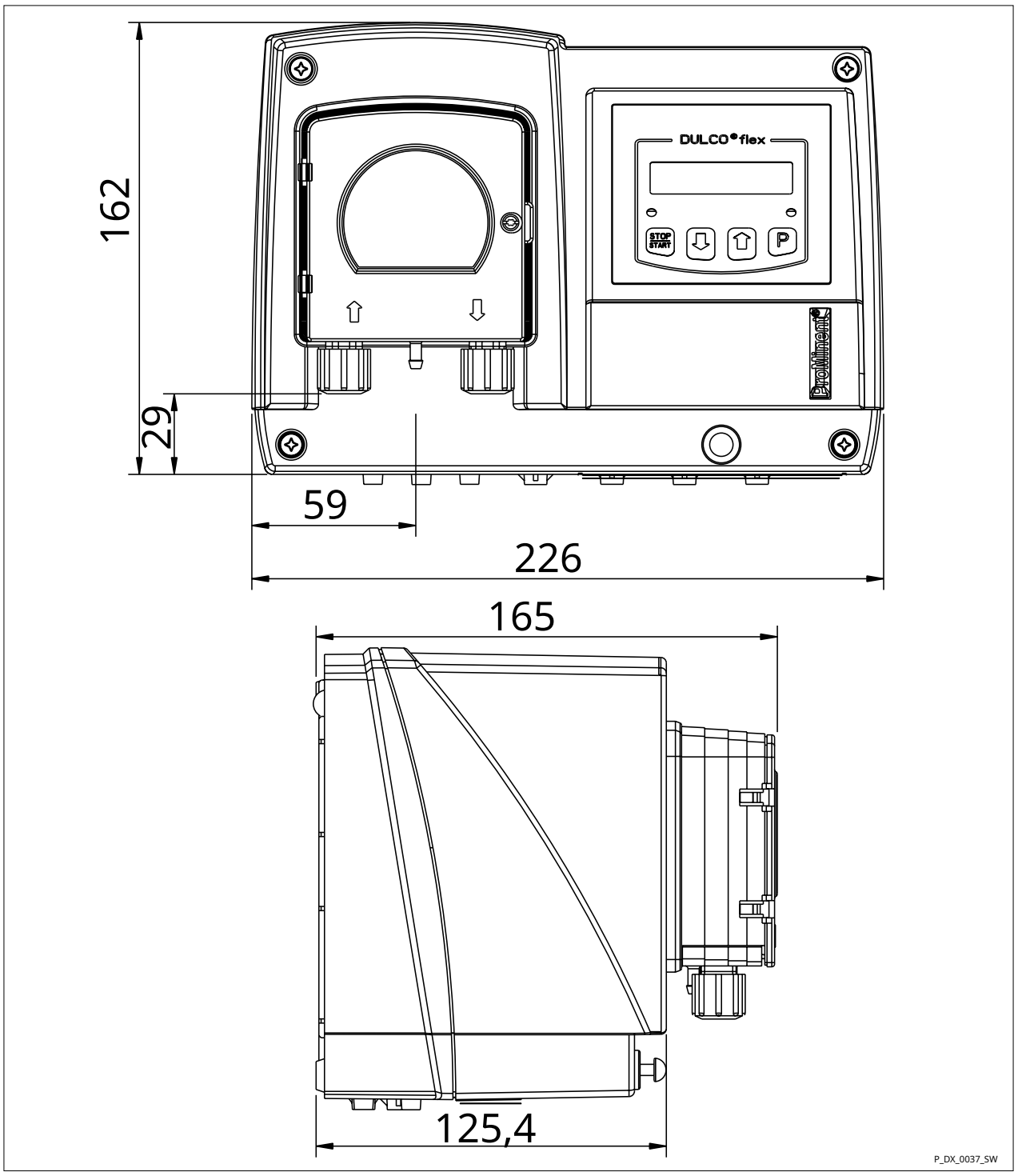

Fig. 5: Dimensional drawing of DF4a - dimensions in mm (not true to scale)

5.2 Assembly

- User qualification: trained qualified personnel, ➦ *Chapter 3.2 'User qualification' on page 10*

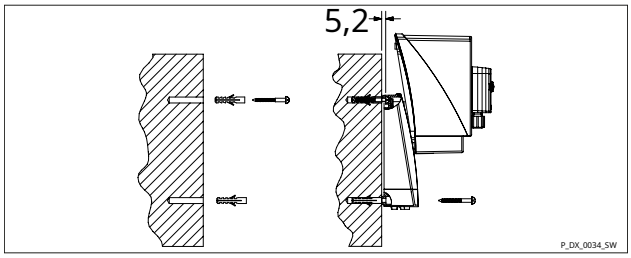

Fig. 6: Wall-mounted, parked position - dimensions in mm (not true to scale).

1. Mark the drill holes on the wall - see *Fig. 4*.
2. Drill the Ø 8 mm holes and position the raw-lplugs supplied - see *Fig. 6*.
3. Screw a cheese-head screw into the upper drill hole. The screw head should then have an approx. 5.2 mm gap from the wall.
4. Suspend the top of the unit into the screw head.

Carefully remove the upper part of the housing from the lower part of the housing to avoid tearing the ribbon cable.

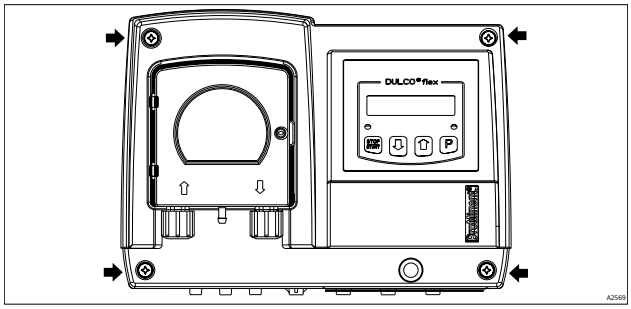

Fig. 7: 4 screws (arrows) on the upper part of the housing

5. To do this, loosen the 4 screws (arrows) on the upper part of the housing.

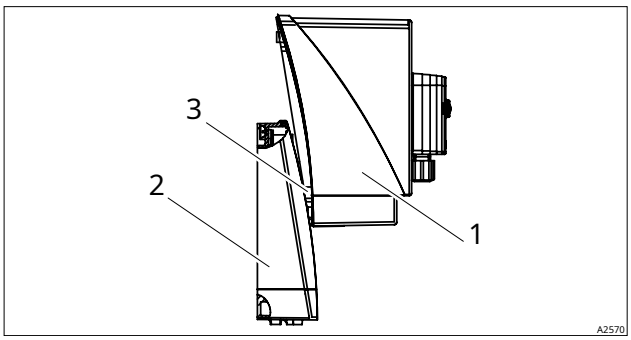

Fig. 8: Parked position

6. Slide the upper part of the housing (1) with the side flaps (3) up into the recesses in the lower part of the housing (2) (parked position).
7. Screw the right and left side of the unit to the wall using the remaining screws.
8. Close the housing, ➦ *Chapter 5.4.4 'Close the housing' on page 20*

5.3 Installation, hydraulic

- User qualification: trained qualified personnel, ➦ *Chapter 3.2 'User qualification' on page 10*

CAUTION

Warning of escaping feed chemical

Feed chemical can escape in the event that the hose lines are incorrectly installed.

- Only use original hoses with the specified hose dimensions 6 x 4 mm or 10 x 4 mm.
- Avoid reducing the hose sizes.
- Only use hose lines capable of withstanding twice the operating pressure of the peristaltic pump.

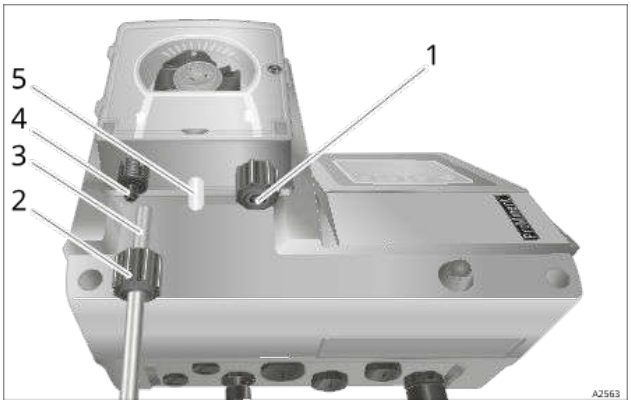

Fig. 9: Assembling the suction and metering line

1 Pressure connector
2 Union nut
3 Hose

4 Suction connector
5 Leakage fitting

Standard connector (6x4) - Installing the suction and metering line:

Installing the suction and metering line:

1. Connect the pressure line to the pressure connector (1).
2. Connect the suction line to the suction connector (4).
3. Cut off the ends of the hoses at right angles.
4. Unscrew the union nut (2) and slide it over the hose (3).
5. Push the hose end over the suction connector (4) as far as the stop.
6. Tighten the union nut.
7. If only a hose line and no suction lance is used: shorten the free end of the suction line so that the end of the suction line hangs just above the base of the feed chemical tank.
8. If necessary: feed the hose line from the leakage fitting (5) back into the feed chemical tank.

Pressure side special connector (10x4) - Installing the suction and metering line:

1. Cut off the ends of the hoses at right angles.
2. Pull the union nut (2) and clamp ring over the hose (3).
3. Push the hose end over the nozzle as far as the stop.
4. Attach the hose (3) with the nozzle to the pressure connector.
5. Clamp the hose connector: tighten the union nut (2) while simultaneously pressing on the hose (3).
6. Check that the hose is fixed in place.

5.4 Installation, electrical

- User qualification: trained electrical technician, ➦ *Chapter 3.2 'User qualification' on page 10*



WARNING

Danger of electric shock

The operator must fit an RCD or another suitable measure to protect personnel and equipment.



WARNING

Unexpected start-up is possible

The pump can start pumping and consequently feed chemical may escape as soon as the pump is connected to the mains/power supply.

- Avoid the escape of feed chemical.
- If you have not done so, immediately press *[STOP/START]* or disconnect the pump from the mains voltage e.g. using an Emergency Stop switch.
- Refer to the material safety data sheet for your feed chemical.

Equipment with a mains plug is connected to the mains power by a suitable socket. Equipment without a mains plug needs to be electrically installed, ➦ *Chapter 5.4.1 'Opening the housing' on page 16*.

5.4.1 Opening the housing

1. Allow the equipment to cool down before working on it.
2. Loosen the 4 screws on the upper part of the housing, *Fig. 7*.
3. Slide the upper part of the housing with the side flaps up into the recesses in the lower part of the housing (parked position), *Fig. 8*.

5.4.2 Preparing for mains connection (equipment without mains plug)

Provide a suitable mains cable with appropriate fuse and circuit breaker.

1. Ensure that the mains power cable is de-energised and remains so.
2. Check that the supply cables have metric threaded connectors. Terminal area - ➦ *Chapter 12 'Technical data' on page 52*.

   Use a screwdriver to break out the small drill hole at the far right on the underside of the back section.
3. Screw in the corresponding threaded connector and tighten it – do not tighten the clamping screw.
4. Insert the reducing insert into the threaded connector depending on the cable cross-section used.

Risk of short circuit

5. Cable ends without cable end sleeves can loosen over a period of time and come into contact with other cable ends.
   - Only use cables with suitable cable end sleeves (0.75 mm^2).

   Guide the mains cable into the threaded connector.
6. Connect the mains cable to terminal block XP1 - see *Fig. 10*.
7. Tighten the clamping screw so that the threaded connector is moisture-proof.

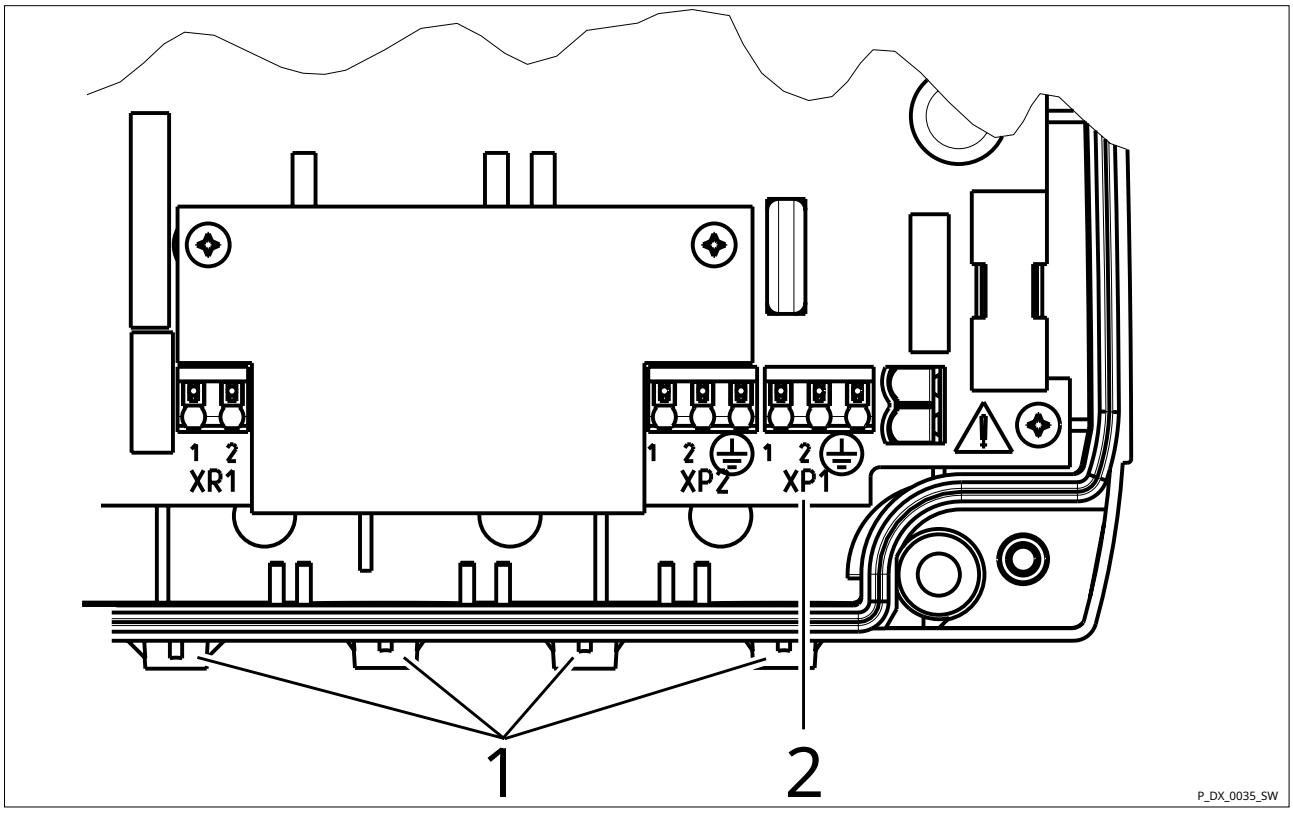

Fig. 10: Preparing the mains connection

1 Break-out drill holes
2 Terminal block XP1

5.4.3 Additional connections

Additional units can be connected to the metering pump's terminal blocks - see ➦ *Chapter 5.4.3.1 'Wiring diagram' on page 19*.

- Pause input
- Level input: Level fault, Level warning (only in the event that the level input is operated with two stages).
- Switched capacity change, for instance night setback (AUX1) or increased capacity (AUX2)
- Alarm relay.
- External input for control by analogue signal.

The external changeover terminal blocks for level input and pause input react differently depending on the delivery status. In the event that the pause input is factory-configured as a normally open contact (N/C) (default: '*NORM.CLOSE*'), then a contact jumper is pre-installed on the corresponding terminal block. This means that the pump can be installed and operated immediately.

The contact jumper may need to be removed when wiring the unit.

A suction lance with a ProMinent® round plug can be inserted directly into the "Level" socket.

5.4.3.1 Wiring diagram

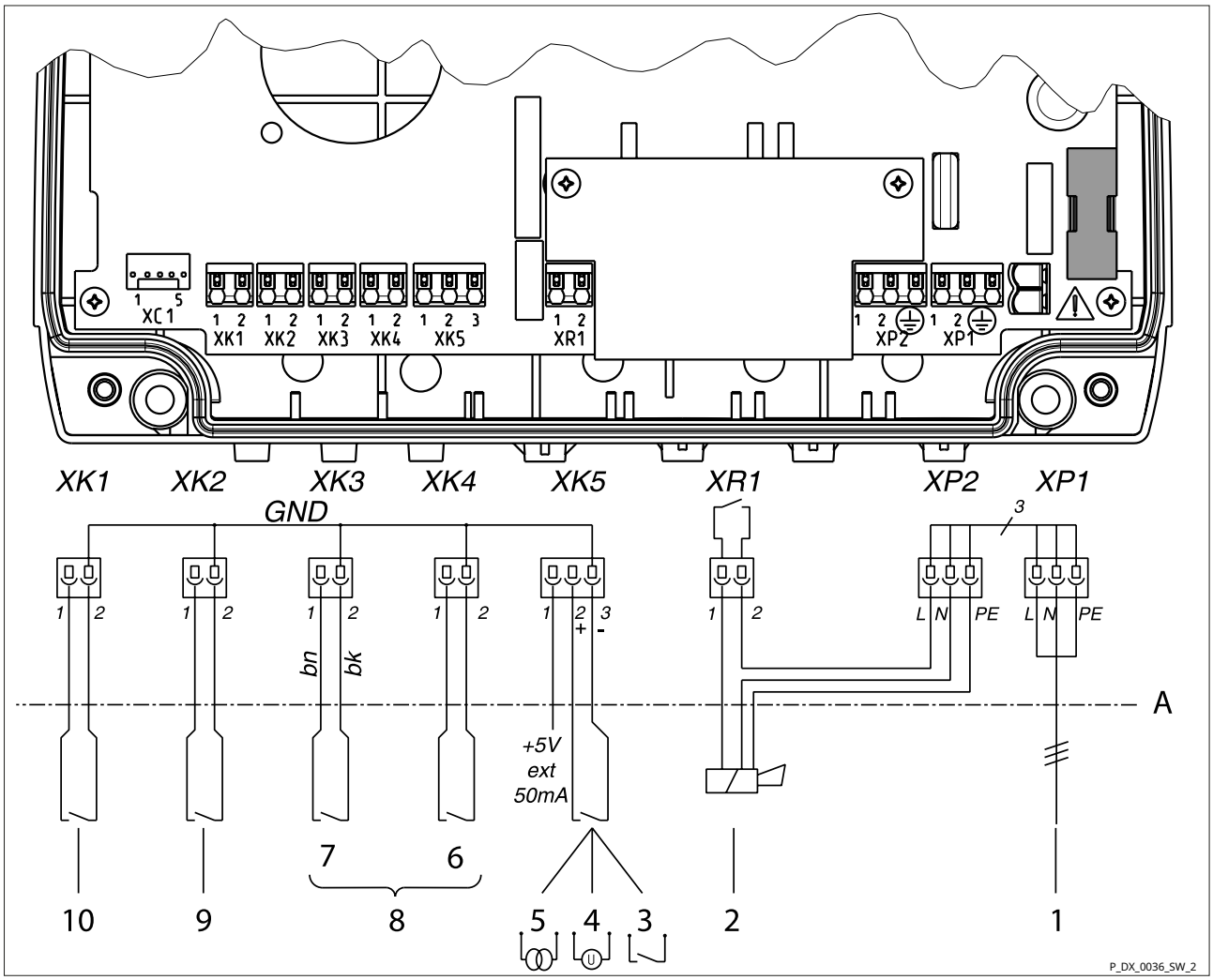

Fig. 11: Wiring diagram for DF4a

A Limit, Internal/External housing
1 Input, mains voltage 100 ... 240 V
2 Output, alarm relay
3 Input, external contact (frequency)
4 Input, external 0 ... 10 V
5 Input, external 0/4 ... 20 mA
6 Input, level warning or capacity change AUX_2
7 Input, level fault
8 Input, level 2-stage* - see *Fig. 12*
9 Input, contact or capacity change *'AUX_1'*
10 Input, pause
* If you are using a suction lance with an open lead.

Connection without round plug

If you are using a suction lance with an open lead or if you have a plug that does not fit, you can cut off this plug and connect the cable leads directly to the terminals, *Fig. 12*.

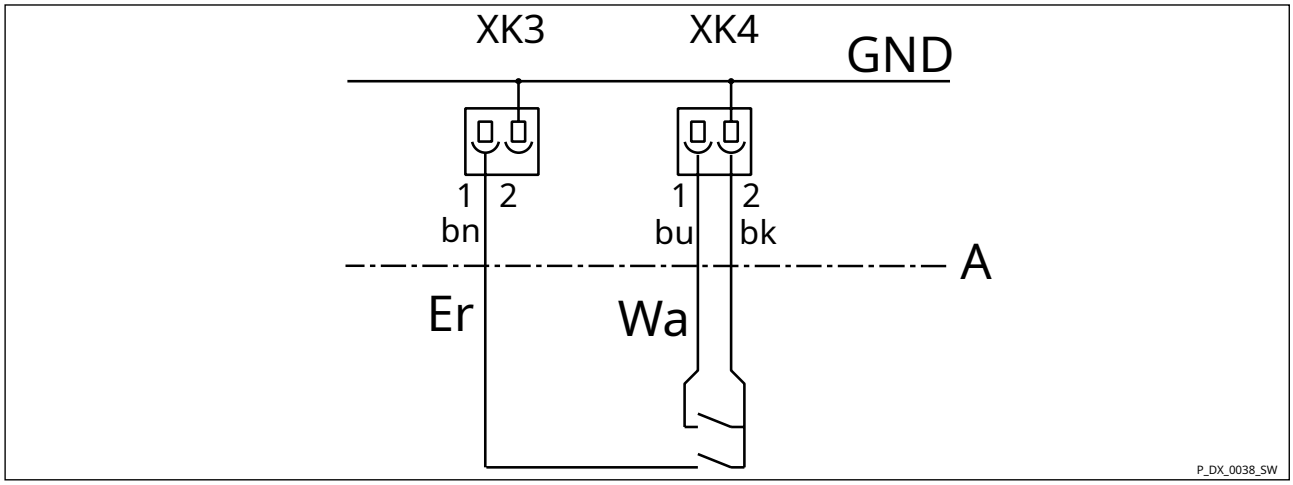

Fig. 12: Example: Terminal wiring diagram for ProMinent® 2-stage level switch

Er Fault, level 2
Wa Warning, level 1
A Limit, Internal/External housing
bn Brown, cable colour, (Fault, level 2)
bu Blue, cable colour, (Warning, level 1)
bk Black, cable colour, (Earth GND)

5.4.3.2 Level input

a) Suction lance with pre-warning and round plug, identity code DF4axxxXXXXXx-xUxx000xx1x

Use a two-stage suction lance with round plug.

A suction lance with a ProMinent® round plug can be inserted directly into the “Level” socket.

a) Suction lance without pre-warning and round plug, identity code DF4axxxXXXXXx-xUxx000xx2x

Use a single-stage suction lance with round plug.

A suction lance with a ProMinent® round plug can be inserted directly into the “Level” socket.

c) Suction lance with lead

Dismantle the “Level” socket on the pump housing to connect a suction lance with lead.

Use an M12 threaded cable connector provided to guide the cable through and connect the leads in accordance with the wiring diagram, *Fig. 12*

d) No suction lance

If no suction lance was connected, the functional plug must remain inserted at the “Level” socket as the pump will not otherwise operate.

5.4.4 Close the housing

1. Place the upper part of the housing onto the lower part of the housing.
2. Manually tighten the 4 screws, approx. 3.5 Nm.



WARNING

Danger of electric shock

IP 65 degree of protection cannot be ensured if the seal is not properly fitted.

- Close the housing leak-tight after all work.
- Check that the seal is correctly fitted.

3. Check that the seal is correctly fitted.

6 Commissioning

- User qualification: trained user ➥ *Chapter 3.2 'User qualification' on page 10*



WARNING

Danger from hazardous substances!

Possible consequence: fatal or very serious injuries.

When handling hazardous substances, please ensure that you have read the latest material safety data sheets provided by the manufacturer of the hazardous substances. The measures required are described in the material safety data sheet. Check the material safety data sheet regularly and replace it, if necessary, as the hazard potential of a substance can be re-evaluated at any time based on new findings.

The system operator is responsible for ensuring that the material safety data sheets are available and that they are kept up to date, as well as for producing an associated hazard assessment for the workplaces affected.



CAUTION

Crushed fingers

The rotating rotor can crush fingers.

– Only operate the pump with the transparent cover fixed in place.

Only operate the pump once it has been properly installed. This means:

- The pump has been installed correctly, as described in section ➥ *Chapter 5.2 'Assembly' on page 15*.
- The pump has been hydraulically installed correctly, as described in section ➥ *Chapter 5.3 'Installation, hydraulic' on page 15*.
- The pump has been electrically installed correctly, as described in section ➥ *Chapter 5.4 'Installation, electrical' on page 16*.
- A sufficient volume of feed chemical is available and the tank is connected to the pump.
- The process into which the feed chemical is to be metered should be operating safely and properly (temperature, circulation output etc. within normal parameters).
- Operating personnel has been selected and trained by the operator, see ➥ *Chapter 3.2 'User qualification' on page 10*

1. Check that everything has been properly fitted.
2. Set up the pump as is sensible and necessary for your metering process, see sections ➥ *Chapter 7.3.2 'Modifying the operating mode ('MODE' menu)' on page 34* and ➥ *Chapter 7.3.1 'Operating menu overview' on page 32*.

Operating mode	Property	Typical application
'MANUAL'	In *'MANUAL'* operating mode, the pump works at a constant metering rate.	Metering of sauna oils or fragrances
'ANALOG'	In *'ANALOG'* operating mode, the pump works with the circulation output of the circulating pump as a reference variable. The reference variable is controlled by the external input.	Metering of chemicals, e.g. flocculants, activated carbon.
'CONTACT'	Contact signals are provided by the external input in *'CONTACT'* operating mode. The pump meters the set volume per contact (*'VOLUM'* menu).	Metering of chemicals, e.g. sodium hypochlorite, H_2O_2, acid. Controlled by a measuring/control unit.

   Press *[Start/Stop]* to start or stop the pump in the respective mode. In stopped mode, *'STOP'* appears in the second line of the LCD display.
3. Press both *[arrow keys]* simultaneously to prime the feed chemical until the pump hose is filled.

4. Use *[Start/Stop]* to start the pump.

7 Setting

7.1 Control unit

The unit is operated by the control unit on the right side of the unit.

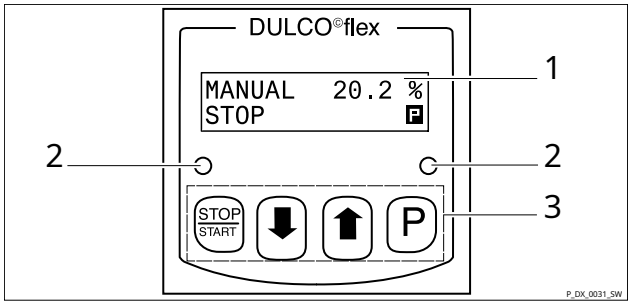

Fig. 13: Control unit

1 LCD display
2 LED
3 Control keys

7.1.1 LCD display

The LCD display consists of a two-line display. The brightness of the LCD display can be adjusted - see chapter entitled "Adjusting the LCD contrast".

Tab. 2: The displayed symbols have the following meanings:

Symbol	Meaning
	*[P]* is active. Press the key to move to the next parameter.
	The *[DOWN]* and *[UP]* arrow keys are active.
	The *[DOWN]* arrow key is active. The maximum value or the uppermost sub-menu has been reached.
	The *[UP]* arrow key is active. The minimum value or the lowermost sub-menu has been reached.

7.1.2 LED

Tab. 3: The unit LEDs (left) show the following information:

LED	Information
off	No supply voltage
steady green	Pump ready and stopped
flashing green	Pump ready and running
steady red	Fault, metering stopped
steady orange	Level error; storage tank is empty; pump stopped
flashing orange	Level warning

Tab. 4: The control LED (right) shows the following information (signals as soon as the unit is connected to the mains/power supply):

LED	Information
green - short, red - 1 second, off	System OK

7.1.3 Control keys

Return to the continuous display

If you press and hold down the P key for 3 seconds or do not press a key for 1 minute, then the pump exits the menu and returns to the continuous display.

The control keys are designated as follows:

Tab. 5: Descriptions of the control keys

Key	Description
STOP START	*[START/STOP]*
⬇	*[DOWN]*
⬆	*[UP]*
P	*[P]*

The control keys have different functions in the continuous display, in the operating menu and in the sub-menus:

Tab. 6: Function of the control keys in conjunction with the continuous display

Key	Functions
⬇ DOWN	Lower / change the set value
⬆ UP	Increase / change the set value
P	Move to the next menu item

Tab. 7: Function of the control keys in conjunction with the operating menu

Key	Functions
⬇ DOWN	Move to the next sub-menu
⬆ UP	Move to the previous sub-menu
P	Open sub-menu (switch to the first item of the selected sub-menu).

Tab. 8: Function of the control keys in a menu item of a sub-menu

Key	Functions
DOWN	Lower / change the set value
UP	Increase / change the set value
P	Accept the set value and move to the next menu item of the sub-menu

Tab. 9: [P] key - additional generally-applicable functions:

Pressing duration	Function
approx. 2 seconds	Open the operating menu, only possible when the pump is stopped.
approx. 3 seconds	Exit the operating menu without saving the set values and return to the continuous display
approx. 5 seconds	Sets the contrast of the LCD display to the default value
approx. 10 seconds	Restores the delivery state

A modified set value is only carried over if the set value has previously been confirmed by pressing *[P]*.

7.2 Continuous displays

7.2.1 Chemical pump

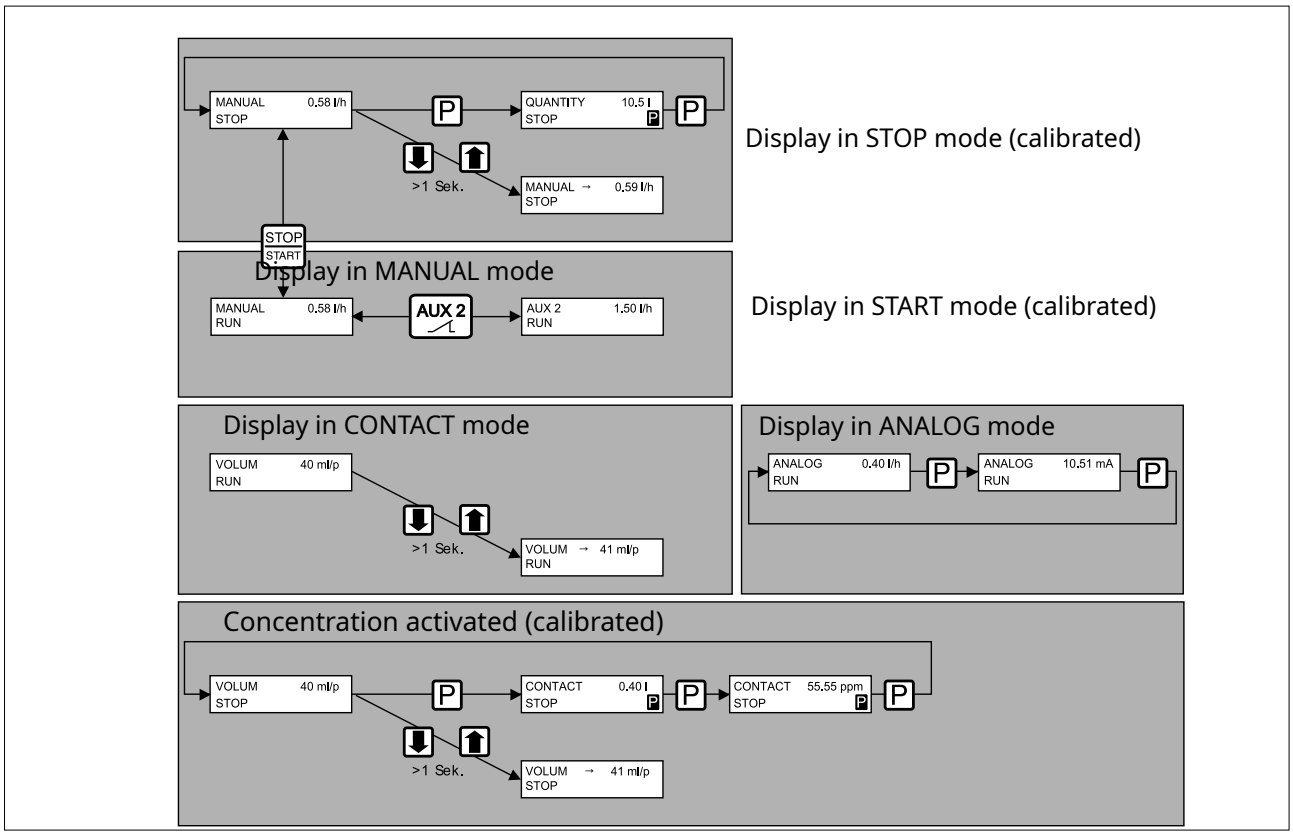

Fig. 14: Overview of continuous displays

Continuous display	"Manual" operating mode	"Analogue" operating mode	"Contact" operating mode
Metering volume			VOLUM 1.50 ml/p STOP
Capacity	MANUAL 0.58 l/h STOP	ANALOG 0.58 l/h STOP	CONTACT 0.58 l/h STOP
Volume counter	QUANTITY 0.50 l STOP	QUANTITY 0.50 l STOP	QUANTITY 7.50 l STOP
Remaining volume			REST 0.20 l STOP
Signal current (at the contact input)		ANALOG 10.5 mA STOP	
Concentration			CONC 500.0 ppm STOP

Fig. 15: Continuous displays in STOP status

7.2.2 Active carbon pump or flocculant pump

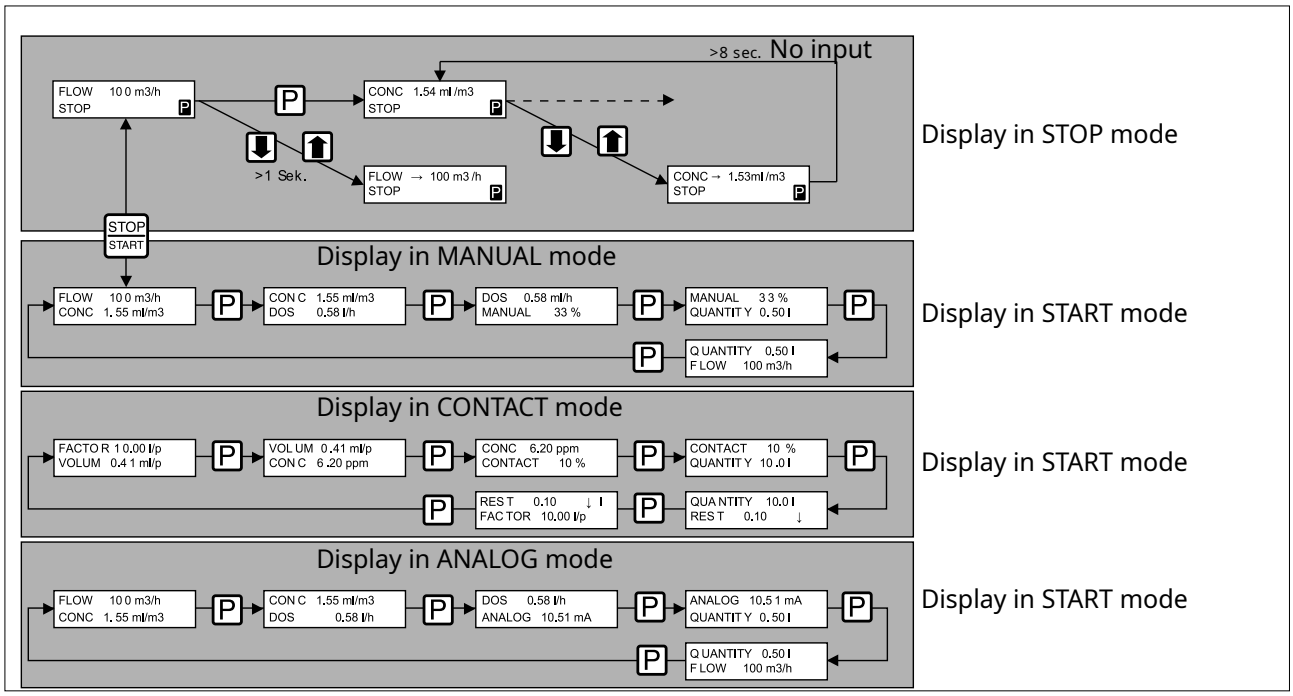

Fig. 16: Overview of continuous displays

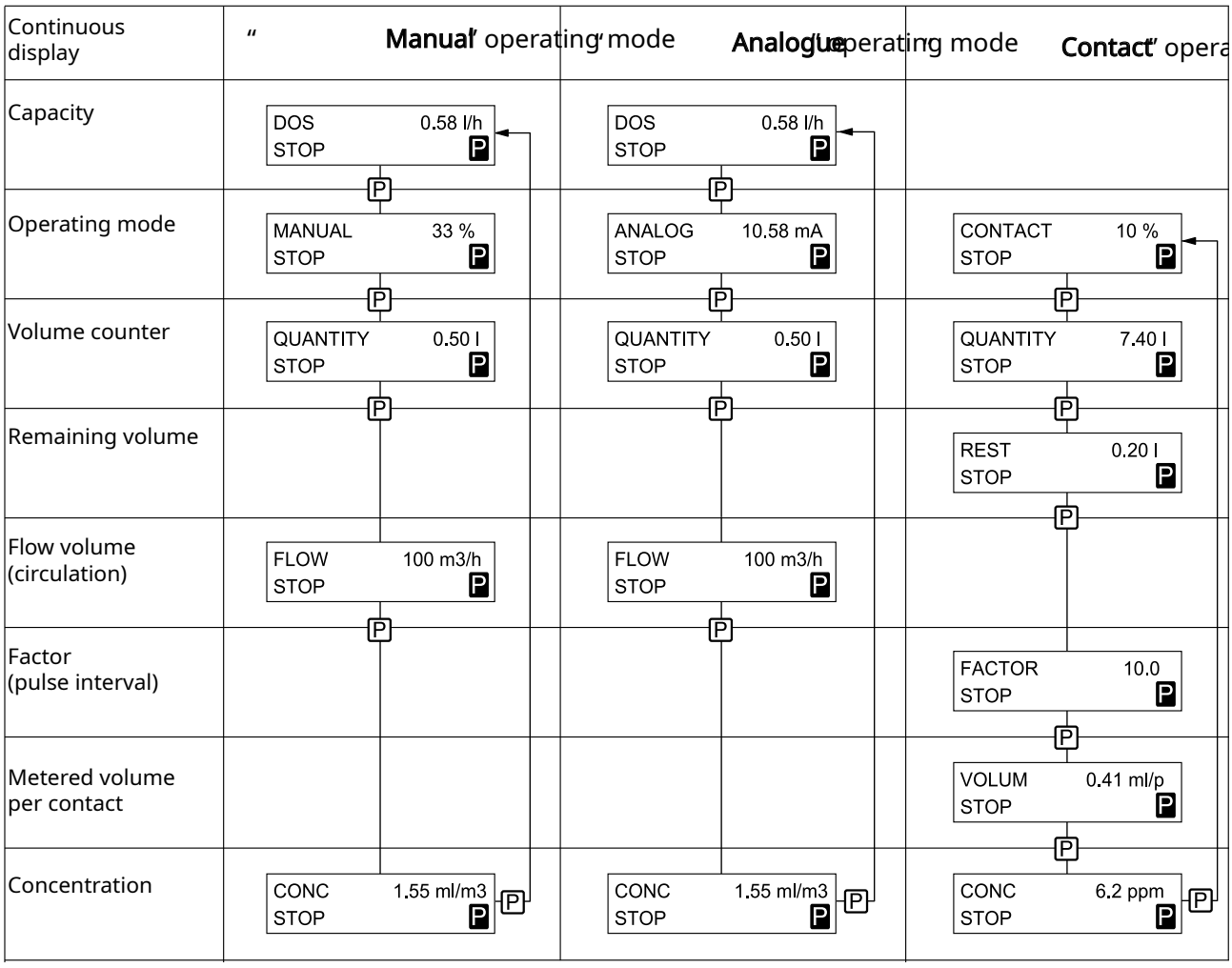

Fig. 17: Continuous displays in STOP status

7.2.3 Setting options for the continuous display

The parameters and setting ranges

The following parameters can be set directly on the continuous display. The parameters can be modified both in Metering mode as well as in Stop mode.

Description	Meaning	Setting range	Factory setting
'DOS'	Capacity	0.1 ml/h ... 99.80 l/h	0.30 l/h
'Manual'	Manual capacity	0.5% ... 100%	20%
'FLOW'	Circulation capacity	1 m^3/h ... 999 m^3/h	200 m^3/h
'CONC'	Metering concentration	0.1 ml/m^3 ... 99.9 ml/m^3	1.5 ml/m^3

'DOS'

The capacity *'DOS'* is the product of the circulation capacity *'FLOW'* and metering concentration *'CONC'*. If the capacity is changed, the metering concentration is adjusted automatically.

'FLOW'

The circulation capacity *'FLOW'* specifies how many m^3 per hour the circulating pump pumps.

***'CONC'* (with MANUAL and ANALOG)**

The metering concentration *'CONC'* specifies how many ml per m^3 are to be metered.

***'CONC'* (with CONTACT)**

The metering concentration *'CONC'* specifies how many ppm are to be metered.

***'MANUAL'* operating mode**

You can change the metering concentration *'CONC'*, the circulation capacity *'FLOW'*, the capacity *'DOS'* and *'MANUAL'* in MANUAL operating mode.

'MANUAL' specifies the value of the capacity *'DOS'* in %.

***'ANALOG'* operating mode**

The metering concentration*'CONC'* and the capacity *'DOS'* must be set in *'ANALOG'* operating mode. The external input analogue signal specifies the value of the circulation capacity *'FLOW'*. If the circulation capacity *'FLOW'* increases, the capacity *'DOS'* automatically rises so that the value of the metering concentration *'CONC'* remains the same.

To change the operating mode of the metering pump - ➥ *Chapter 7.3.2 'Modifying the operating mode ('MODE' menu)' on page 34*.

Setting the capacity

Would you like to set the capacity in l/h?

1. Press *[P]* as often as required until *'DOS'* appears in the first line of the LCD display.
   ➡ *'MANUAL'* also appears in the second row
2. Use the *[arrow keys]* to enter the required capacity.
   ➡ The *'MANUAL'* display shows the current capacity in %.

Setting the final concentration

(Typical application: volume-proportional metering of flocculants in swimming pools)

Would you like to set the final concentration?

1. Press *[P]* as often as required until *'FLOW'* appears in the first line of the LCD display.
2. Press and hold down *[P]* and use the *[arrow keys]* to enter the circulation output.
   ➡ *'CONC'* appears in the LCD display.
3. Use the *[arrow keys]* to enter the required final concentration.

***'CONTACT'* operating mode**

You can enter the required final concentration in ppm in *'CONTACT'* operating mode.

This value is re-calculated in the event that the metered volume is modified per contact.

To change the operating mode of the metering pump - ➥ *Chapter 7.3.2 'Modifying the operating mode ('MODE' menu)' on page 34*.

Capacity / *'CONTACT'* operating mode

The capacity can be set for the active carbon and flocculant pump at between 0.5 and 100% of the pump capacity and for the chemical pump at between 0.5 and 100 l/h.

In the *'CONTACT'* display there is an additional lower case "m" if the memory function (*'MEMORY'*) has been switched on and there are contacts in the memory for processing.

Metered volume per *'VOLUM'* contact

The metered volume per contact can be set here in ml per contact. This value is re-calculated in the event that the final concentration is modified.

'FACTOR' pulse interval factor

You can set the pulse interval in litres per contact here.

For example, an entry of 10.0 means 10 litres per contact.

7.3 Operating menu

In the operating menu you can access:

Prerequisite:

The pump is stopped.

An access code is set.

1. Press *[P]* for approx. 2 seconds.
   - ➧ The *'CODE'* prompt appears.
2. Enter the access code (*[arrow keys]*) and press *[P]*.
   - ➧ The *'MAIN'* input page of the operating menu appears.

Exit the operating menu - without saving entries

- Press *[P]* for approx. 3 seconds or wait 1 minute.
  - ➧ A continuous display appears.

Operating menu structure

The menus consists of menu items to modify parameters.

Tab. 10: The operating menu comprises the following menus (depending of the unit ordered and settings):

1	*'MODE'*
2	*'SET'*
3	*'CONFIG'*
4	*'SERVICE'*
5	*'INFO'*
6	*'SECURITY'*
7	*'CALIBRATION'*

7.3.1 Operating menu overview

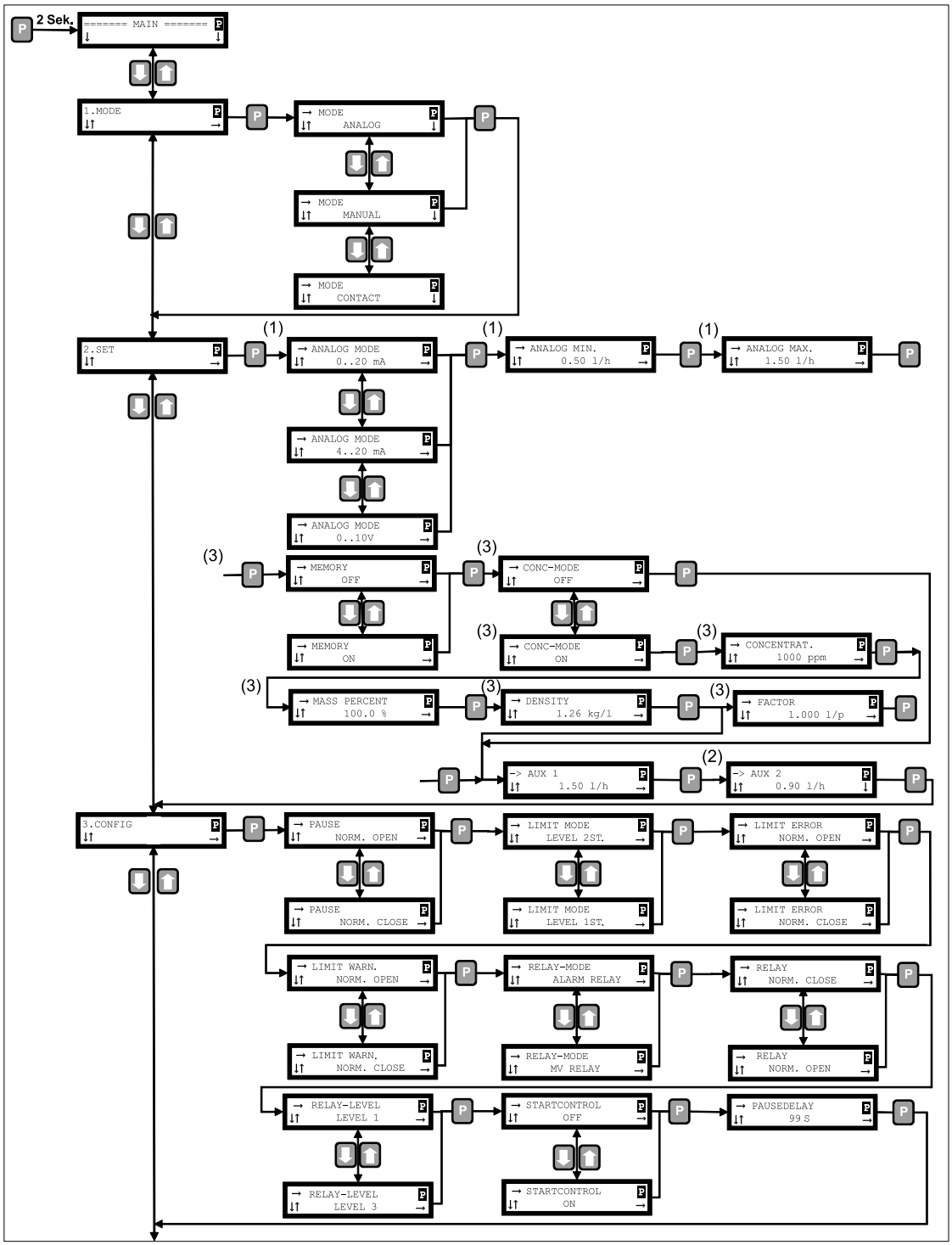

Fig. 18: Overview of DF4a operating menu

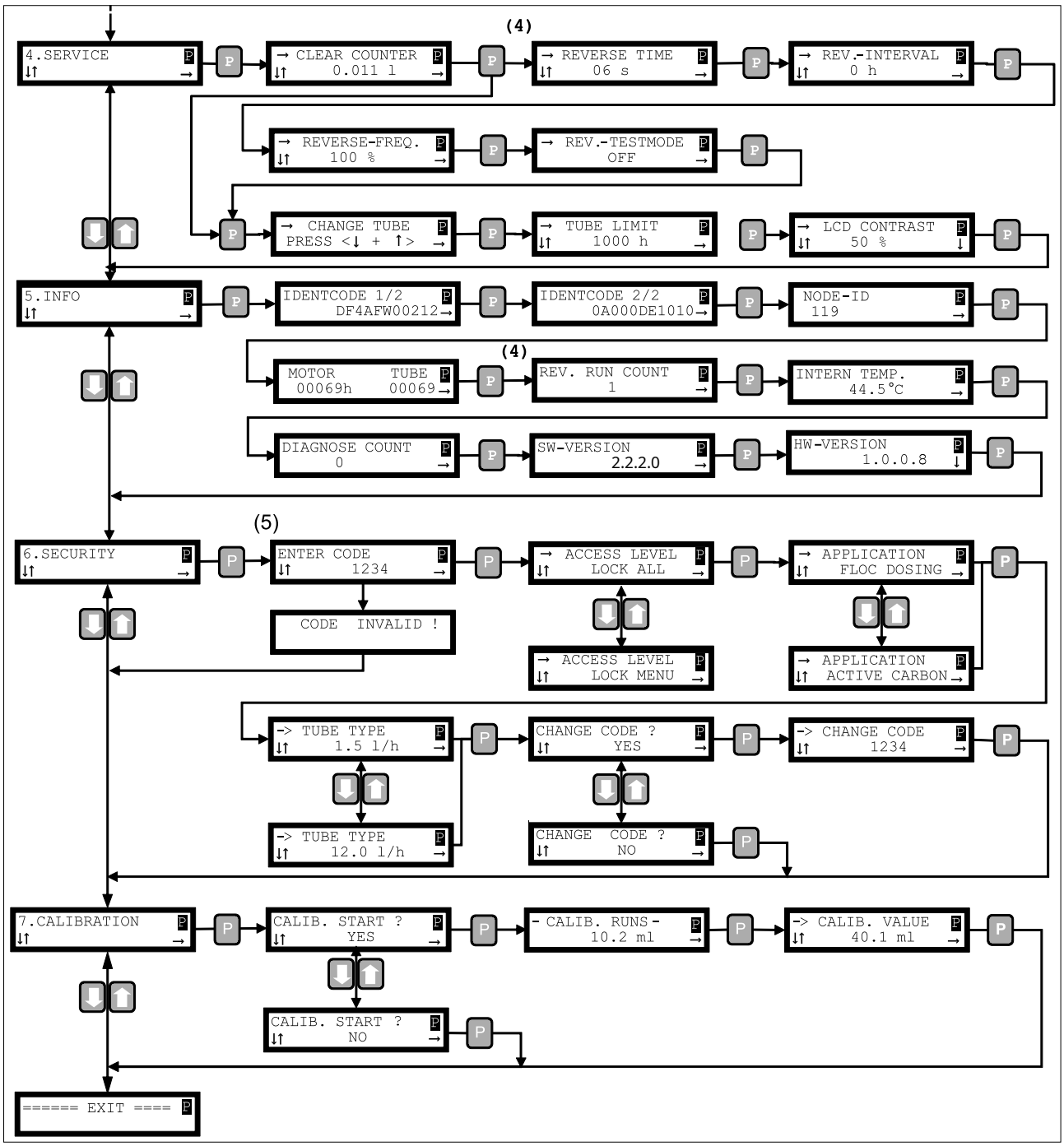

Fig. 19: Overview of DF4a operating menu

1 when MODE = ANALOG
2 when LEVEL MODE = LEVEL 1ST
3 when MODE = CONTACT
4 with application ACTIVE CARBON
5 In the event of blocked access

7.3.2 Modifying the operating mode (*'MODE'* menu)

There are two operating modes:

- *'MANUAL'*
- *'ANALOG'*
- *'CONTACT'*.

The operating mode setting determines whether the capacity of the pump is to be manually set, controlled by the analogue input (circulating output) or controlled by the contact input.

In *'MANUAL'* operating mode, the pump works with a constant capacity, which can be set using the *[arrow keys]*. The current capacity is displayed in the continuous display.

The circulation output is specified by the external input in *'ANALOG'* operating mode.

Contact signals are provided by the external input in *'CONTACT'* operating mode. The pump meters the set volume per contact (*'VOLUM'* menu).

Press *[Start/Stop]* to start or stop the pump in the respective mode. In stopped mode, *'STOP'* appears in the second line of the LCD display.

The analogue signal is used to set the circulation output of the circulating pump and not the capacity of the peristaltic pump with the active carbon and flocculant pump.

7.3.3 Changing parameters (*'SET'* menu)

7.3.3.1 Settings for *'ANALOG'* operating mode (*'ANALOG'* sub-menu)

If *'ANALOG'* operating mode is set - ➦ *Chapter 7.3.2 'Modifying the operating mode ('MODE' menu)' on page 34*, you have to set the standard signal range (0/4... 20 mA or 0 ... 10 V) of the analogue input and the corresponding circulation output.

CAUTION

Connecting the incorrect cable to the analogue input can lead to unwanted results.

Make sure when switching over to *'ANALOG'* operating mode that the right signal is pending at the analogue input. If necessary, remove the signal cable before switching over to *'ANALOG'* operating mode to rule out incorrect functions.

The minimum circulation output is set, which can be supplied by a minimum analogue signal (0/4 mA or 0 V) in the *'ANALOG MIN'* menu item.

The maximum circulation output is set, which can be supplied by a maximum analogue signal (20 mA or 10 V) in the *'ANALOG MAX'* menu item.

7.3.3.2 Settings for Contact operating mode (*'CONCENTRAT'* sub-menu)

The settings are only possible in "Contact" operating mode.

7.3.3.2.1 Unit LED signals

Unlike in *'MANUAL'* and *'ANALOG'* operating modes, the unit LED flashes with every contact signal.

A contact frequency in excess of 10 Hz is displayed by a constant flashing frequency of 10 Hz. For this reason, the flashing frequency for frequencies over 10 Hz is merely an indication that contact signals are being input.

7.3.3.2.2 Operation without extended function *'MEMORY'*

In Contact mode without the extended function *'MEMORY'*, the set metering volume (*'VOLUM'*) is processed at the set capacity. Excessive incoming contact signals are not stored and are lost.

7.3.3.2.3 Operation with extended function *'MEMORY'*

When the extended function *'MEMORY'* is switched on, all contact signals transmitted to the pump during the metering process are stored and subsequently processed.

The stored contact signals can be deleted by disabling the memory function or by changing the operating mode.

A maximum of 100,000 contact signals can be stored. If more contact signals are pending, an error message (*'EXTERN LIMIT'*) appears and the pump stops.

7.3.3.2.4 Special behaviour with extended function *'MEMORY'*

Frequency operation

(not with chemical pump)

The contact signals are processed in accordance with the specified metering volume and the specified capacity in **Contact operating mode**.

If the extended function *'MEMORY'* is switched on, the pump switches over from Contact mode to Frequency mode in the event that the input frequency rises above 0.4 Hz - see .

The input frequency corresponds to a set capacity in **Frequency operating mode**. This means with a factor of 1.0, the maximum capacity is achieved at an input frequency of 3 Hz.

Only when the value 0.2 Hz is undershot does the pump switch back from Frequency mode to Contact mode - see .

Metering process is automatically terminated

The metering process is terminated in the event that no contacts are supplied for 2 to 3 seconds and simultaneously the contact memory is empty.

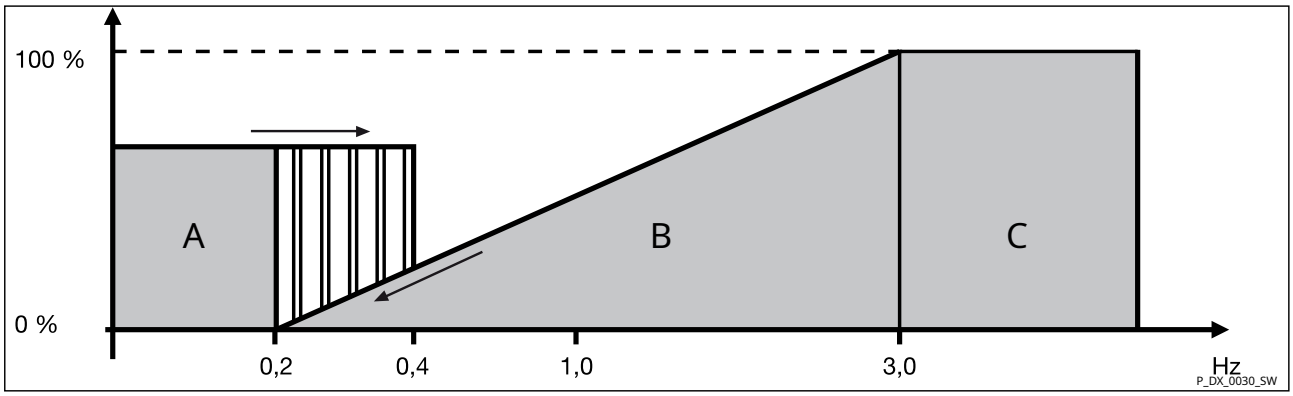

Fig. 20: A Contact mode, B Frequency mode, C Constant range

Special behaviour with extended function MEMORY

Possible settings:

Manual capacity: 10%,

Metering volume per contact: 2.5 ml/p

Factor (pulse interval): 1.0

Maximum capacity: 1.5 l/h

The 20 contact signals correspond to: 20 x 2.5 ml = 50 ml

If the contact signals are supplied rapidly (> 0.4 Hz), then the 50 ml is processed at a capacity depending on the input frequency of the contact signals (Frequency mode).

If the contact signals are supplied slowly (≤ 0.4 Hz), then the 50 ml is processed at a manual capacity of 10% (Contact operating mode).

At 10% capacity, the metering pump needs at least 1 minute for 2.5 ml. This means that the metering pump needs at least 20 minutes for 50 ml.

To reduce the post-rinse period

Always work with a small metering volume per contact signal in Frequency operating mode. This is due to the fact that the post-rinse period is based on the number of non-processed contact signals multiplied by the contact processing time.

To avoid sudden changes in speed

Configure a manual capacity of less than 10% when operating in Contact mode to avoid sudden changes in speed when starting and stopping the unit.

Factor

The pump is equipped for contact water meter operation and delivers 100% of its capacity at a contact frequency of 3 Hz (180 contacts/min). The contact frequency at which the pump works at 100% capacity can be modified by the *'FACTOR'* parameter.

Example

For example, 100% capacity is achieved at 2 Hz with a factor of 1.5. Or the capacity is only reached at 6 Hz with a factor of 0.5 - see the following table:

Tab. 11: Capacity in % depending on the contact frequency and the parameter 'FACTOR'

Contact frequency	***'FACTOR'* parameter**		
Hz	**0.5**	**1.0**	**1.5**
0.2	3.3	6.7	10
0.3	5	10	15
0.4	6.6	13.3	20
0.5	8.3	16.7	25
0.6	10	20	30
1	16.6	33.3	50
2	33.3	66.7	**100**
3	50	100	100
4	66.7	100	100
5	83.3	100	100
6	**100**	100	100
10	100	100	100

7.3.3.2.5 Other settings

Prerequisite: Metering operation is stopped.

1. Press *'P'* for approx. 2 seconds.
   ➡ The *'MAIN'* input page appears.
2. Press *'DOWN'* as often as is needed until the *'SET'* menu appears.
3. Press *'P'*.
   ➡ The sub-menu *'CONCENTRAT'* appears.
4. Enter the required concentration and press *'P'*.
   ➡ The *'MASS PERCENT'* sub-menu appears.
5. Enter the mass concentration of the feed chemical (see material safety data sheet for the feed chemical) and press *'P'*.
   ➡ The sub-menu *'DENSITY'* appears.
6. Enter the mass density of the feed chemical (see material safety data sheet for the feed chemical) and press *'P'*.
   ➡ The sub-menu *'FACTOR'* appears.

The purpose of Factor mode is to convert the incoming pulses with a step-down (fraction) or small step-up to specific metering volumes.

7. Enter the required factor and press *'P'*.
8. Enable the Concentration function using *'ON'* (*[arrow keys]*) and press *'P'*.
9. Enable/disable the function extension *'MEMORY'* as required with *'ON'* (*[arrow keys]*) and press *'P'*.
10. Press *'P'* for approx. 3 seconds.
    ➡ A continuous display appears - the pump can be restarted.

7.3.3.3 Settings for switched capacity change (sub-menus *'AUX_1' / 'AUX_2'*)

With flocculant or active carbon pump:

The switched capacity change is used to change the current capacity by a percentage value. This means that a capacity change of 150% will lead to a capacity of 90% at a current capacity of 60%. It is impossible to achieve an absolute capacity of greater than 100%. The changed capacity appears on the LCD display while the capacity change is being switched.

If both capacity changes are activated (switched), then only the capacity change with the lower value is performed. For example, if *'AUX_1'* has a capacity change of 10% and *'AUX-2'* has a capacity change of 140%. If both are activated then only the capacity change of 10% is performed.

The pump stops if the capacity falls below 0.5%.

With chemical pumps:

The switched capacity change is used to change the current capacity by a fixed capacity. The changed capacity appears on the LCD display while the capacity change is being switched.

If both capacity changes are activated (switched), then only the capacity change with the lower value is performed.

7.3.4 Changing the configuration (*'CONFIG'* menu)

You can configure the following in this menu:

1 Pause input *'PAUSE'*
2 Level function *'LIMIT'*
3 Relay function *'RELAY'*
4 Start-up behaviour of the motor *'STARTCONTROL'*
5 Pause delay timer *'PAUSE DELAY'*

7.3.4.1 Pause input configuration (*'PAUSE'* sub-menu)

Switch input *'Pause'* can be used to trigger a remote stop for the pump, without the need to disconnect the pump from the mains.

You can set the standard position of the switch, which is connected to the pause input, in the operating menu. The following settings are possible:

- *'NORM. OPEN'* (N/C)
- *'NORM. CLOSE'* (N/O)

7.3.4.2 Level function configuration (*'LIMIT'* sub-menu)

The level function contains a two-stage level input. Use of the two-stage level input enables a pre-warning when the metering reservoir is undershot and shut-down when the metering reservoir is empty.

The set level mode determines whether the level input is used as a two-stage or single-stage input.

In single-stage level mode, you can use the switch needed for pre-warning in two-stage mode as a switch for changing capacity AUX_2, .

7.3.4.3 Relay function configuration (*'RELAY'* sub-menu)

The relay can be configured as an alarm relay or, with the active carbon pump, it can be used to control a solenoid valve for backflushing.

The alarm is triggered when a certain event has occurred at the alarm relay. The alarm is switched by a relay.

The alarm relay is set by default as normally closed N/C. This means that, for example, a cable fracture or lack of voltage is registered as a fault. The following settings are possible for the alarm relay:

- *'NORM. OPEN'* (N/C)
- *'NORM. CLOSE'* (N/O)

A total of 3 alarm stages can be used. Each alarm stage uses different event types at which the alarm is triggered:

Alarm stage	Event types used
'LEVEL 1'	Serious fault (HW fault, hose fracture etc.)
'LEVEL 2'	Serious fault (HW fault, hose fracture etc.) + level empty signal
'LEVEL 3'	Serious fault (HW fault, hose fracture etc.) + level empty signal + level pre-warnings and hose replacement warning

At LEVEL 3 the relay switches at warnings.

7.3.4.4 Configuring the start-up behaviour of the motor (*'STARTCONTROL'* sub-menu)

This parameter determines how the motor behaves at start-up. In the event of low ambient temperatures, a gentle start-up helps to protect the hose and the pump's drive unit. Set the parameter to *'ON'*. With *'OFF'* the motor starts up normally and immediately achieves the required speed.

7.3.4.5 Configuring the pause delay timer (*'PAUSE DELAY'*)

This setting menu enables pump metering to be delayed after a remote stop (*'PAUSE'*).

7.3.5 Service menu (*'SERVICE'* menu)

In the service menu you can:

1 Reset the counter (*'CLEAR COUNTER'*)

2 Set the backflushing parameters (*'REVERSE'*)

3 Apply hose functions (*'CHANGE TUBE'*)

4 Set the LCD contrast (*'LCD-CONTRAST'*)

7.3.5.1 Reset the counter (*'CLEAR COUNTER'* sub-menu)

In the *'CLEAR COUNTER'* sub-menu you can use *'DOWN'* to set the counter for the (*'QUANTITY'*) metering volume to "0".

7.3.5.2 Set backflushing parameters (*'REVERSE'* sub-menu)

The active carbon pump has the option of occasionally backflushing the pump hose - when doing so, the rotor rotates in an anticlockwise direction. You can set the backflushing parameters in the *'REVERSE'* sub-menu.

A solenoid valve can be controlled by the relay output to open the backflushing line (configured as 'MV RELAY').

Manual backflushing

It is possible to manually backflush in the *'REVERSE-TIME'* sub-menu.

If you have set a backflushing time of 0 seconds, then the motor moves until you press the two *[arrow keys]*.

If you have set a backflushing time of greater than 0 seconds, (*[arrow keys]*), then the motor moves backwards in accordance with this backflushing time. The residual time is indicated on the display.

Press *[P]* to cancel the backflushing time - the system then jumps to the next menu item.

The service interval counter does not increase with manual backflushing.

Automatic backflushing

With automatic backflushing, the metering process is interrupted and the system backflushes for the specified time (*'REVERSE-TIME'*).

After backflushing, the system is automatically primed for 6 seconds to refill the suction line.

Backflushing interval

You can set the backflushing interval in the *'REV.-INTERVAL'* sub-menu.

The unit can only be backflushed after the pump has been switched on after a metering time of 1 minute.

Backflushing speed

We recommend leaving the maximum speed set so that the deposits can be removed more effectively.

You can set the backflushing speed in the *'REVERSE FREQ.'* sub-menu.

7.3.5.3 Using hose functions (*'CHANGE TUBE'* sub-menu)

The *'CHANGE TUBE'* function supports you when replacing the pump hose when pulling the pump hose into the right position ➥ *'Replacing the pump hose' on page 44*.

The pre-warning time *'TUBE LIMIT'* for the next hose replacement can be set. Once this time has elapsed, the operator is warned that a hose replacement is pending on the LCD display.

7.3.5.4 Setting the LCD contrast (*'LCD-CONTRAST'* sub-menu)

In the *'LCD-CONTRAST'* sub-menu, you can use the *[arrow keys]* to change the contrast of the LCD display.

7.3.6 Reading system information (*'INFO'* menu)

You can read off the following system information:

- Identity code
- Node ID
- Operating hours of motor and hose
- Number of backflushing processes (only active carbon pump)
- Housing interior temperature
- Software version
- Hardware version

Reading the identity code

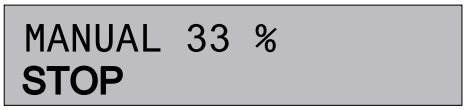

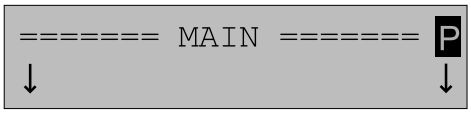

1. Press *[P]* in the continuous display for approx. 2 seconds.
   ➡ The *'MAIN'* menu appears.
2. Use the *[arrow keys]* to enter the access code and press *[P]*.



3. Press *[DOWN]* as often as is needed until the *'INFO'* menu appears.

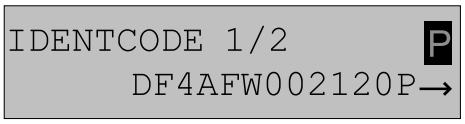

4. Press *[P]*.
   ➡ The *'IDENTCODE 1/2'* display shows the first half of the identity code.
5. Press *[P]*.

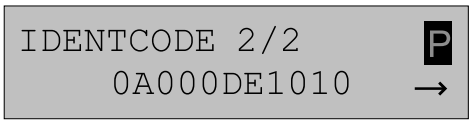

   ➡ The *'IDENTCODE 2/2'* display shows the second half of the identity code.

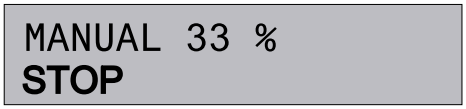

6. Press *[P]* for approx. 3 seconds.
   ➡ A continuous display appears.

7.3.7 Security-relevant settings (*'SECURITY'* menu)

The following security-relevant settings can be set:

1 Access level (*'ACCESS LEVEL'*)

2 Application (*'APPLICATION'*)

3 Hose type (*'TUBE TYPE'*)

4 Access code (*'CHANGE CODE'*)

7.3.7.1 Setting the access level (ACCESS LEVEL sub-menu)

The following table shows what functions are protected by which access level:

Access level	Priming, Start/ Stop	Continuous displays	Operating menu	*'SECURITY'* sub-menu
'LOCK ALL'	-	X	X	-
'ONLY MENU'	-	-	X	-
'NONE'	-	-	-	X

In other words, the access code is requested prior to:

- Making entries in the continuous displays
- Access to the operating menu
- Access to the *'SECURITY'* menu with access level *'NONE'*

7.3.7.2 Setting the application (*'APPLICATION'* sub-menu)

The following applications are available:

- Chemical pump
- Flocculant pump
- Active carbon pump

7.3.7.3 Setting the hose type (*'TUBE TYPE'* sub-menu)

This sub-menu can be used to adapt the pump to a modified hose type.

If the hose type is changed, then the corresponding rotor must also be used.

7.3.7.4 Setting the access code (CHANGE CODE sub-menu)

You can activate, enter or change an access code in this sub-menu.

The factory setting for the access code is 1111.

Once you have set an access code, the access code then limits access to operation, .

You can input entries once the access code has been entered on the prompt screen. If no keys are pressed, then the access remains open for a further 3 minutes.

7.3.8 Calibrating the pump (CALIBRATION menu)

Only calibrate the pump with water for reasons of safety and ease of use.

Requirements:

- The pump is stopped.
- The suction hose hangs freely into a filled measuring tank or into a tank filled with water standing on scales.

1. Note down the liquid level of the weight.

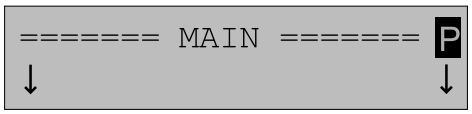

2. Press *[P]* in the continuous display for approx. 2 seconds.

   ➥ The *'MAIN'* menu appears.

3. Use the *[arrow keys]* to enter the access code and press *[P]*.



4. Press *[DOWN]* as often as is needed until the *'CALIBRATION'* menu appears.



5. Press *[P]*.

   ➡ The *'CALIB. START'* sub-menu appears.

> *If you do not intend to carry out calibration, use the [arrow keys] to select 'NO'.*

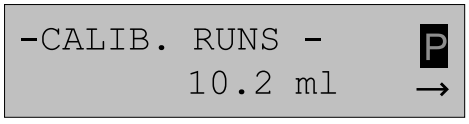

6. Press *[P]*.

   ➡ The *'CALIB. RUNS'* sub-menu appears and the pump starts pumping.

7. After the pump has achieved a sufficient number of rotations (approx. 10 revolutions), press *[P]*.

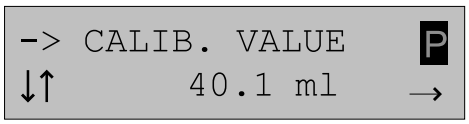

   ➡ The *'CALIB. VALUE'* sub-menu appears and the pump stops.

8. Note down the new weight and/or the new liquid level.

9. Divide the weight difference by 1 g/ml and/or subtract the two liquid levels from each other.

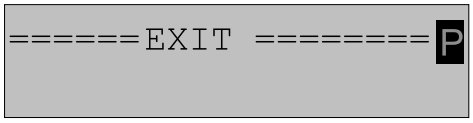

10. In the event that the specified value deviates from the value indicated, use the *[arrow keys]* to enter the specified value in the sub-menu and press *[P]*.

    ➡ *'EXIT'* appears and the calibration process is complete.

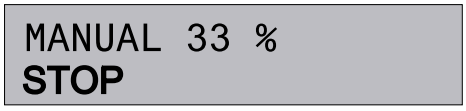

11. Press *[P]* once again.

    ➡ A continuous display appears.

12. You can re-start the pump when you have reconnected the suction hose.

8 Operation

Starting / stopping the pump

User qualification: instructed user, see ➦ *Chapter 3.2 'User qualification' on page 10*

The pump can be started / stopped using:

- *[Start/Stop]* key
- Pause input
- Mains switch

Replacing the feed chemical tank



WARNING

Danger from hazardous substances!

Possible consequence: fatal or very serious injuries.

When handling hazardous substances, please ensure that you have read the latest material safety data sheets provided by the manufacturer of the hazardous substances. The measures required are described in the material safety data sheet. Check the material safety data sheet regularly and replace it, if necessary, as the hazard potential of a substance can be re-evaluated at any time based on new findings.

The system operator is responsible for ensuring that the material safety data sheets are available and that they are kept up to date, as well as for producing an associated hazard assessment for the workplaces affected.

1. Stop the pump using *'Stop/Start'*.
2. Place the new feed chemical tank under the metering pump and open the feed chemical tank.
3. Carefully remove the suction assembly vertically out of the old feed chemical tank.
4. Insert the suction assembly into the new feed chemical tank and screw the suction assembly in place.
5. Start the pump using *'Stop/Start'*.
6. If necessary, press the two *[arrow keys]* simultaneously for priming.

   ➡ The pump primes.

Priming

→ Press the two *[arrow keys]* simultaneously for priming.

➡ The pump primes.

9 Maintenance

- User qualification: trained user, ➦ *Chapter 3.2 'User qualification' on page 10*

Expected service life of the pump hose

Determining the service life of the pump hose

At the start of the pumping process, regularly check the pump hose for wear, several times a day if necessary. The service life and thus the replacement interval for the pump hose can be derived from the collected information and experience.

The service life of the pump hose is between 200 and 2000 operating hours. The range comes from the different applications. The pressing pressure of the slide shoe and/or the rollers on the pump hose has a direct impact on its service life.

The following have a negative impact on the service life of the pump hose:

- High back pressure,
- High speed,
- High temperature,
- Abrasive feed chemicals,
- Exposure to chemicals,
- Long switching-on period.

The higher for example the back pressure is, the more strongly does the pump hose have to be squeezed to prevent backflows. A higher temperature also shortens the service life of the pump hose. The service lives of the different types of hose also differ. The primary factor is the speed of the peristaltic pump, as the number of squeezes automatically determines the service life of the pump hose. The faster the rotor rotates, the greater the pump capacity. The pump hose is exposed to higher loads with high speeds. To design the peristaltic pump perfectly, it is therefore necessary to specify precisely how often and for how long the peristaltic pump will be in operation. If there are reliable figures, it is possible to determine the expected service life of the pump hose.

Interval	Maintenance work
After extended periods of idleness	Check the status and flow of the suction line and the pressure line and rectify faults, if necessary.
approx. 6 months*	Check: ■ Visual inspection of the liquid end ■ Leak-tightness of the pump hose ■ Leak-tightness of the hose connections ■ Leak-tightness of the threaded connector
approx. annually*	Replace the pump hose.

* Maintenance intervals may have to be shortened depending on the feed chemical used and operating conditions, and should be defined by the operator.

The power end is maintenance-free.

Replacing the pump hose

WARNING

Danger from hazardous substances!

Possible consequence: fatal or very serious injuries.

When handling hazardous substances, please ensure that you have read the latest material safety data sheets provided by the manufacturer of the hazardous substances. The measures required are described in the material safety data sheet. Check the material safety data sheet regularly and replace it, if necessary, as the hazard potential of a substance can be re-evaluated at any time based on new findings.

The system operator is responsible for ensuring that the material safety data sheets are available and that they are kept up to date, as well as for producing an associated hazard assessment for the workplaces affected.

1. Stop metering operation by pressing the Start/Stop key.
2. Use a suitable flushing medium to flush the pump, referring to the material safety data sheet for the feed chemical.
3. Use an on-site depressurisation option to depressurise the pump.

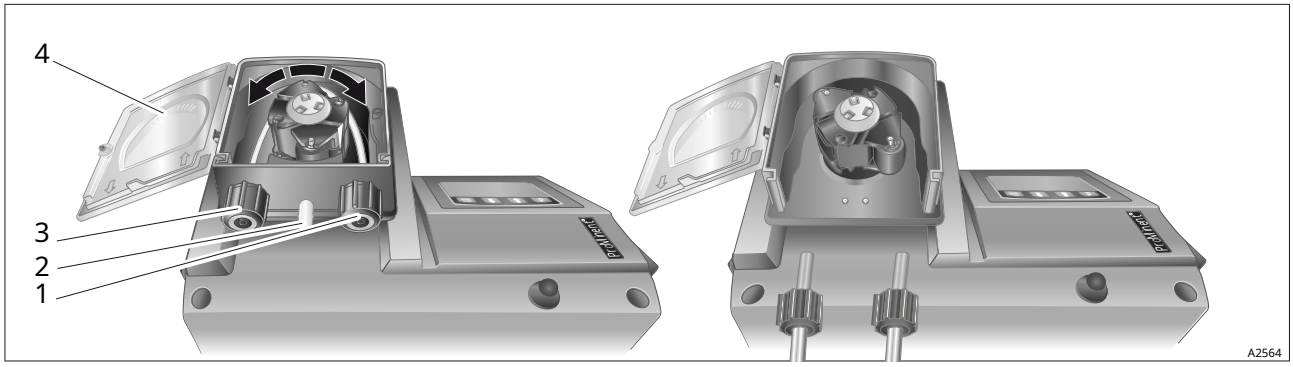

Fig. 21: Replacing the pump hose

4. Loosen the suction line (3), the pressure line (1) and, if fitted, the leakage line (2) from the pump connectors.

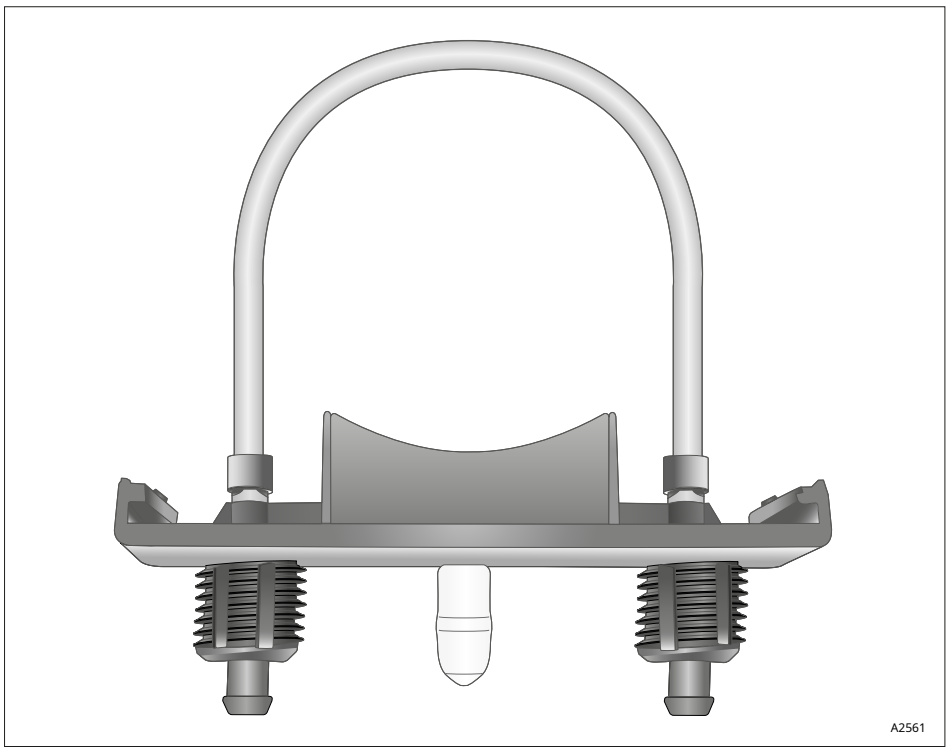

Fig. 22: Hose bracket (= plug-in lower part of the liquid end)

5. Loosen the fixing bolt of the transparent cover (4) and remove the transparent cover.

6. Pull the hose bracket (= plug-in lower part of the liquid end) together with the hose forwards out of the liquid end.

Press both *[arrow keys]* simultaneously when the rotor is turning.

➡ The motor supports the rotor.

7. Slide the new hose bracket with the new pump hose into the liquid end.

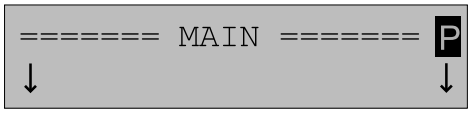

8. Press *[P]* for approx. 2 seconds.

➡ The *'MAIN'* input page appears.



9. Press *[DOWN]* 4x ...

➡ ... the *'4.SERVICE'* menu appears.

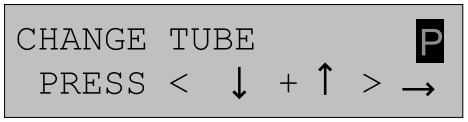

10. Press *[P]* as often as needed ...

➡ ... until *'CHANGE TUBE'* appears.

11. Simultaneously press the *[arrow keys]*.

➡ The motor turns slowly at least 2 1/2 times. In doing so, the pump hose is moved into the correct position under the rollers. At the same time, the DF4a resets the internal operating hour counter.

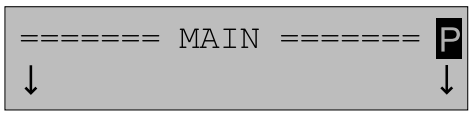

12. Press *[P]* for approx. 3 seconds.
    ➡ The *'MAIN'* input page appears.
13. Close the transparent cover and manually tighten the fixing bolt.
    Only operate the pump with the transparent cover closed.
14. Connect the suction line, the pressure line and, if fitted, the leakage line to the pump connectors.
    ➡ You can now restart the pump.

10 Troubleshooting

- User qualification: trained user, ➥ *Chapter 3.2 'User qualification' on page 10*

10.1 Errors without error messages

Fault description	Cause	Remedy
The pump is not working despite having been started and connected to the mains voltage.	The black functional plug or the suction lance plug is not inserted into the “Level” socket.	Insert the black functional plug or the suction lance plug into the “Level” socket.
The pump no longer achieves full pump capacity.	The pump hose has lost its elasticity.	Replace the pump hose - ➦ *‘Replacing the pump hose’ on page 44*.

10.2 Faults with error messages

The unit LED lights up red in the event of a fault. The pump is stopped.

Fault description	Cause	Remedy
‘LIMIT ERROR!’	Feed chemical storage tank empty.	Replace the feed chemical storage tank - ➦ *Chapter 8 ‘Operation’ on page 42*.
‘TUBE LEAKAGE!’	Hose fracture or moisture in the dosing head	■ Clean and dry the contacts. ■ Replace the pump hose - ➦ *‘Replacing the pump hose’ on page 44*. ■ Use *[Start/Stop]* to start the pump.
‘ANALOG ERROR!’	Impermissible analogue signal value (> 25 mA).	Check the analogue signal.
‘EXTERN LIMIT!’	Too high an analogue signal value (> 22 mA or > 10.5 V).	Check the analogue signal.
‘MOTOR LOST!’	Step motor not connected or cable faulty.	Check the step motor connector. Observe the safety information, ➦ *Chapter 5.4 ‘Installation, electrical’ on page 16*.
‘MOTOR FAILURE!’	Step motor not connected or step motor faulty.	Check the step motor connection, replace the step motor if necessary. Observe the safety information, ➦ *Chapter 5.4 ‘Installation, electrical’ on page 16*.
‘SYSTEM ERROR!’	Processor error.	Return the pump to the supplier for repair.
‘TEMP ERROR!’	Pump too hot/too cold.	Lower/raise the temperature.
‘HARDWARE ERROR!’	Component faulty.	Perform several attempted starts. If this is unsuccessful, return the pump to the supplier for repair.
‘SM DRVR ERROR!’	Step motor driver faulty.	Perform several attempted starts. If this is unsuccessful, return the pump to the supplier for repair.

10.3 Warning with error message

The unit LED lights up orange in the event of a warning. The pump is not stopped.

Fault description	Cause	Remedy
'LIMIT WARNING'!	Feed chemical level warning	Provide a storage tank filled with feed chemical.
'TUBE WARNING!'	Specified operating time of pump has elapsed	Replace the pump hose, ➦ *'Replacing the pump hose' on page 44*
*'MIN. WARNING!'**	Set metering volume < 0.5%.	Check the setting parameters.
*'MAX. WARNING!'**	Set metering volume > 100%	Check the setting parameters.
'SPEED WARNING!'	The actual capacity exceeds the set metering output.	You can change the capacity in the *'CONTACT'* continuous display.

* The warning only appears if the warning has been set up in the *'CONFIG'* menu under *'RELAY-LEVEL'*.

10.4 All other faults

Inform Service or your ProMinent branch. You will find the current contact addresses on the manufacturer's homepage www.prominent.com.

11 Decommissioning and disposal

Decommissioning

- **User qualification:** instructed user, see ➦ *Chapter 3.2 'User qualification' on page 10*



WARNING

Danger from hazardous substances!

Possible consequence: fatal or very serious injuries.

When handling hazardous substances, please ensure that you have read the latest material safety data sheets provided by the manufacturer of the hazardous substances. The measures required are described in the material safety data sheet. Check the material safety data sheet regularly and replace it, if necessary, as the hazard potential of a substance can be re-evaluated at any time based on new findings.

The system operator is responsible for ensuring that the material safety data sheets are available and that they are kept up to date, as well as for producing an associated hazard assessment for the workplaces affected.

1. Disconnect the peristaltic pump from the mains power supply.
2. Allow the peristaltic pump to cool, if necessary.
3. Depressurise the peristaltic pump, if necessary.
4. Thoroughly clean the liquid end and the housing of chemicals and dirt. Refer to the material safety data sheet for the feed chemical.
5. Adhere to the storage conditions if you are only decommissioning the peristaltic pump temporarily, ➦ *Chapter 12.5 'Ambient conditions' on page 53*

11.1 Used parts disposal/Declaration of Decontamination

- **User qualification:** instructed user, see ➦ *Chapter 3.2 'User qualification' on page 10*



WARNING

Danger from hazardous substances!

Possible consequence: fatal or very serious injuries.

When handling hazardous substances, please ensure that you have read the latest material safety data sheets provided by the manufacturer of the hazardous substances. The measures required are described in the material safety data sheet. Check the material safety data sheet regularly and replace it, if necessary, as the hazard potential of a substance can be re-evaluated at any time based on new findings.

The system operator is responsible for ensuring that the material safety data sheets are available and that they are kept up to date, as well as for producing an associated hazard assessment for the workplaces affected.



NOTICE

The used part can only be accepted with a completed Declaration of Decontamination

A printed copy is also available to download at: www.prominent.com

A completed and signed "Declaration of Decontamination" is required by law and in order to protect our staff, before your order can be processed.

Ensure that the Declaration of Decontamination is attached to the outside of the package. Otherwise we are unable to accept your shipment.



NOTICE

Regulations governing the disposal of used parts

– Note the national regulations and legal standards that currently apply in your country when disposing of the product.

ProMinent GmbH, Heidelberg/Germany will take back clean used parts.

12 Technical data

12.1 Performance data

Tab. 12: DULCO®flex DF4a

Type	Operating pressure* of PharMed®	Capacity*	Speed	Pump hose outer Ø x inner Ø	Connector size outer Ø x inner Ø	Suction lift**	Priming lift**	Permissible priming pressure on the suction side**
-	bar	l/h	rpm	mm	mm	m	m	bar
04004	4.0	0.35	85	0.8 x 4.0	6x4 / 10x4	4	3	0.5
04015	3.0	1.50	85	1.6 x 4.8	6x4 / 10x4	4	3	0.5
03060	2.0	6.00	85	3.2 x 6.4	6x4 / 10x4	4	3	0.5
02120	1.5	12.00	85	4.8 x 8.0	6x4 / 10x4	4	3	0.5
* depends on the back pressure								
** determined with water at 20 °C								

12.2 Precision

Precision of pump capacity ±10% with a new pump hose.

12.3 Dimensions and weights

Dimensions

Dimensions of the unit (W x H x D) 226 x 162 x 155mm, for other dimensions, refer to the dimensional drawing.

Tab. 13: Dimensions of the threaded cable connectors

Threaded cable connector	Terminal area	Width across flats (AF)
M12x1.5	Ø 3.5 - Ø 6.0 mm	AF 15
M16x1.5	Ø 5.0 - Ø 10 mm	AF 19
M20x1.5	Ø 8.0 - Ø 13 mm	AF 25

Weight

Value	Parameter
Shipping weight (gross), approx.	2.4 kg
Device weight (net), approx.	1.9 kg

12.4 Material specifications

Part	Material
Pump hose	PharMed®
Hose connection	PVDF
Rollers on the rotor	PVDF
Rotor and roller lever	PA
Transparent cover	PC
Dosing head	PPE
Housing upper part	PPE+GF
Housing lower part	PP
Damping plate	Soft PVC
Cable threaded connectors	PA / Neoprene®
Metal parts (screws, etc.)	A2

12.5 Ambient conditions

Temperatures

Specification	Parameter
Permissible ambient temperature	+10 ... +45 °C
Permissible medium temperature	+10 ... +45 °C
Permissible storage temperature of the fully drained pump.	-10 ... +55 °C

Climate

Specification	Parameter
Relative humidity, non-condensing, max.	95%

Specification	Information
Exposure in a humid and changing climate	According to DIN EN 60068-2-30.

Specification	Information
Chemical resistance	The unit is resistant to normal atmospheres in plant rooms.

Specification	Information
UV resistance	Not resistant to direct UV radiation (sun, fluorescent tubes ...).

12.6 Degree of protection and safety requirements

Degree of protection

Specification	Information
Protection against contact and moisture	IP 65 according to DIN EN 60529.

Safety requirements

Specification	Information
Protection class	1 - according to DIN EN 60335-1 (protective conductor connection required).

12.7 Electrical data

Overall unit

Specification	Parameter
Connection voltage	100...240 Volt
Mains frequency	50/60 Hz
Power consumption	0.4 ... 0.2 A
Power consumption	approx. 24 watts
Switching-on duration	100%
Fuse value*	1.0 slow blow
* Type Schurter® series SPT	
A unit fuse (short-circuit protection) is fitted.	

Control of the step motor

Type: Micro-step control (16 micro-steps per step)

Specification	Parameter
Switching-on duration	100%
Nominal voltage	24 Volt
Max. phase current at motor start-up*	1.9 A
Max. phase current in continuous operation*	1.7 A
* regulated	

Inputs

External inputs:

Supply for external units: Rating +5 V / 50 mA, short circuit-proof

Input	Specification	Parameter
Contact input	Input resistance:	15 kΩ against +5 V
	Max. input frequency:	10 Hz
0 ... 20 mA input	Input resistance:	120 Ω against GND
	Filter time constants:	1 second
0 ... 10 V input	Input resistance:	13 kΩ against +5 V
	Filter time constants:	1 second

Tab. 14: Pause input:

Input	Specification	Value
Contact input	Input resistance:	15 kΩ against +5 V
	Max. input frequency:	10 Hz

Tab. 15: 'AUX_1' input:

Input	Specification	Value
Contact input	Input resistance:	1 kΩ against +5 V
	Max. input frequency:	10 Hz

Tab. 16: Level input deactivation:

Input	Specification	Value
Contact input	Input resistance:	15 kΩ against +5 V
	Filter time constants:	2 seconds
0 ... 20 mA input	Input resistance:	120 Ω against GND
	Filter time constants:	1 second

Tab. 17: Level input prewarning / 'AUX_2':

Input	Specification	Value
Contact input	Input resistance:	15 kΩ against +5 V

Input	Specification	Value
	Max. input frequency:	10 Hz

Outputs

Tab. 18: Alarm relay:

Input	Specification	Value
Output relay output	Type of contact:	N/O contact, interference-suppressed with varistor
	Load capacity:	250 VAC, 3 A, 700 VA
	Contact lifespan:	> 10^5 switching operations in accordance with EN 60730-1

12.8 Sound pressure level

Sound pressure level

< 60 dB (A) at maximum back pressure (water) according to DIN EN 3743-1.

13 Ordering information for spare parts/accessories

Ordering address for spare parts and accessories: The current address for ordering spare parts and accessories can be found on the manufacturer's homepage www.prominent.com.

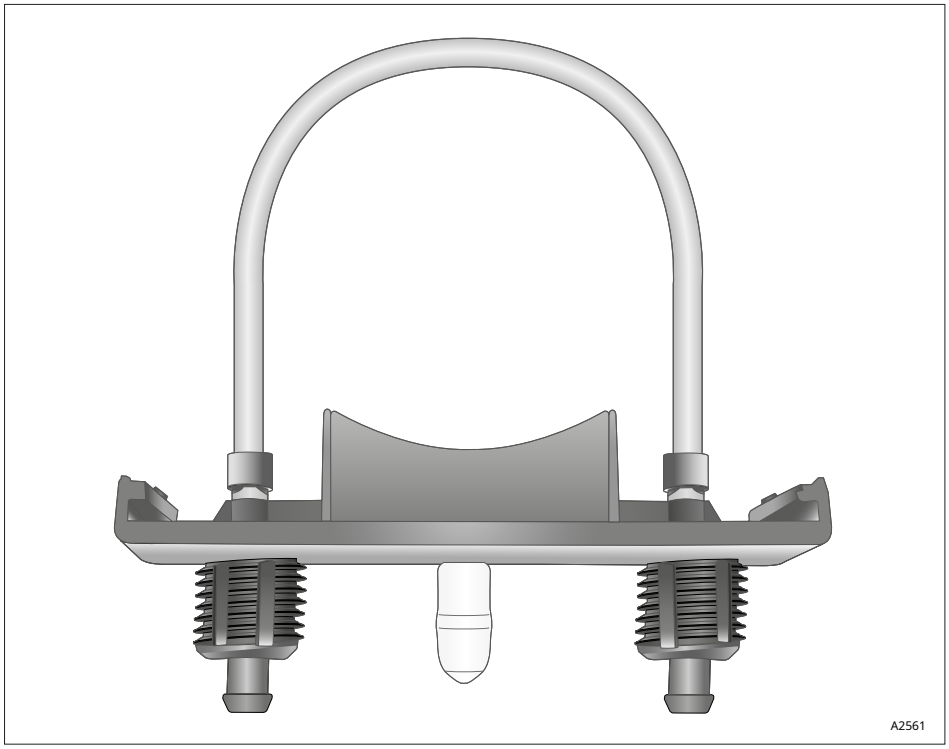

Fig. 23: Pump hose for DF4a

Tab. 19: Pump hoses for DF4a

Type	Material	Colour	Order no.
04004	PharMed®	black	1034997
04015	PharMed®	blue	1030722
03060	PharMed®	orange	1030723
02120	PharMed®	white	1030774

Tab. 20: Other parts

Product	Order no.
Assembly material, complete, 3P Universal	815308
Mains cable	Ordered using the identity code (“Cable and plug”)
Lip-seal metering valve PCB and 10 metre PE metering line	Ordered using the identity code (“Accessories”)

14 Declaration of Conformity for Machinery

In accordance with DIRECTIVE 2006/42/EC OF THE EUROPEAN PARLIAMENT AND OF THE COUNCIL, Appendix I, BASIC HEALTH AND SAFETY REQUIREMENTS, section 1.7.4.2. C.

We,

- ProMinent GmbH
- Im Schuhmachergewann 5 - 11
- D - 69123 Heidelberg, Germany,

hereby declare that the product specified in the following, complies with the relevant basic health and safety requirements of the EC Directive, on the basis of its functional concept and design and in the version distributed by us.

Any modification to the product not approved by us will invalidate this declaration.

Tab. 21: Extract from the EC Declaration of Conformity

Designation of the product:	Peristaltic pump, DULCOflex
Product type:	DF4a
Serial number:	see nameplate on the device
Relevant EC directives:	Machinery Directive (2006/42/EC) Compliance with the protection targets of the Low Voltage Directive according to Appendix I, No. 1.5.1 of the Machinery Directive (2006/42/EC) RoHS Directive (2011/65/EU) EMC Directive (2014/30/EU)
Harmonised standards applied, in particular:	EN ISO 12100: 2010 EN 809: 1998 + A1: 2009 + AC: 2010 EN 61010-1: 2010 EN 50581: 2012 EN 61000-6-2: 2005 + AC: 2005 EN 61000-6-3: 2007 + A1: 2011 + AC: 2012
Date:	20.04.2016

You can download the Declaration of Conformity at www.prominent.com.

15 Overview of setting parameters

Application as chemical pump

Parameter	Meaning	Setting range	Factory setting
'DOS'	Capacity	7.5 ml/h* ... 99.80 l/h*	0.30 l/h
AUX_1 / AUX_2	Manual capacity change	7.5 ml/h* ... 1.50 l/h*	0.75 l/h / 1.25 l/h
MODE	Operating mode	*'MANUAL'*, *'ANALOG'*, *'CONTACT'*	*'MANUAL'*
'ANALOG MODE'	Analogue operating mode	0 ... 20 mA, 4 ... 20 mA, 0 ... 10 V	0 ... 20 mA
'ANALOG MIN.'	Capacity at 0/4 mA or 0 V	0.0 l/h ... 1.50 l/h*	0.75 l/h
'ANALOG MAX.'	Capacity at 20 mA or 10 V	0.0 l/h ... 1.50 l/h*	1.25 l/h*
'PAUSE'	Pause input	*'NORM.OPEN'*, *'NORM.CLOSE'*	(dependent on identity code)
'LIMIT MODE'	Level operating mode	*'LEVEL 1 ST.'*, *'LEVEL 2 ST.'*	*'LEVEL 2 ST.'*
'LIMIT ERROR'	Level shut-off	*'NORM.OPEN'*, *'NORM.CLOSE'*	(dependent on identity code)
'LIMIT WARN'	Level warning	*'NORM.OPEN'*, *'NORM.CLOSE'*	(dependent on identity code)
'RELAY'	Relay output	*'NORM.OPEN'*, *'NORM.CLOSE'*	(dependent on identity code)
'RELAY-LEVEL'	Relay message level	*'LEVEL 1'*, *'LEVEL 2'*, *'LEVEL 3'*	*'LEVEL 1'*
'STARTCONTROL'	Start-up behaviour of the step motor	*'ON'* / *'OFF'*	*'OFF'*
'TUBE LIMIT'	Hose replacement, warning time	0 ... 20000 h	5000 h
'LCD-CONTRAST'	Display contrast	0 ... 100%	38%
'RELAY-MODE'	Relay operating mode	*'ALARM RELAY'*, *'MV RELAY'*	ALARM RELAY
'ENTER CODE'	Enter access code	0000 ... 9999	1111
'ACCESS LEVEL'	Level access protection	NONE, LOCK MENU, LOCK ALL	NONE
*** for the 1.5 l/h pump**			

Parameter	Meaning	Setting range	Factory setting
'APPLICATION'	Application	CHEM-PUMP, FLOC DOSING, ACTIVE CARBON,	(dependent on identity code)
'TUBE TYPE'	Hose dimensions	0.5 l/h, 1.5 l/h, 6.0 l/h, 12.0 l/h	(dependent on identity code)
'CONCENTRAT.'	Concentration	0.01 ppm ... 9999 ppm	40.0 ppm
'MASS PERCENT'	Mass percent	0.1 ... 100.0%	100.0%
'DENSITY'	Density	0.50 ... 2.00 kg/l	1.0 kg/l
'FACTOR'	Pulse interval factor	0.001 ... 1000 (l/p)	1.000 (l/p)
'VOLUME /PULS'	Metering volume per contact	0.001... 9999 ml/p	0.040 ml/p
'MEMORY'	Contact memory	OFF, ON	OFF
'CONC.-MODE'	Concentration mode	OFF, ON	OFF
'PAUSE-DELAY'	Delay period after pause	0 s ... 9:59 m	0 s
*** for the 1.5 l/h pump**			

Application as flocculant pump and active carbon pump

Parameter	Meaning	Setting range	Factory setting
'CONC'	Metering concentration	0.01 ml/m³ ... 99.9 ml/m³	1.5 ml/m³
'FLOW'	Circulation capacity	0(1) m³/h – 999 m³/h	200 m³/h
'DOS'	Capacity	7.5 ml/h* ... 99.80 l/h*	0.30 l/h
'MANUAL'	Manual capacity	0.5% ... 100.0%	20%*
'AUX_1 / AUX_2'	Manual capacity change	1% ... 150%	50% / 100%
'MODE'	Operating mode	MANUAL, ANALOG, CONTACT	MANUAL
'ANALOG MODE'	Analogue operating mode	0 ... 20 mA, 4 ... 20 mA, 0 ... 10 V	0-20 mA
'ANALOG MIN.'	Minimum circulation capacity	0 m³/h *'(ANALOG_MAX.-1)'*	0 m³/h
'ANALOG MAX.'	Maximum circulation capacity	*'(ANALOG_MIN+1'*) 999 m³/h	500 m³/h
'PAUSE'	Pause input	*'NORM.OPEN'*, *'NORM.CLOSE'*	(dependent on identity code)
'LIMIT MODE'	Level operating mode	*'LEVEL 1 ST.'*,*' LEVEL 2 ST.'*	*'LEVEL 2 ST.'*
'LIMIT ERROR'	Level shut-off	*'NORM.OPEN'*, *'NORM.CLOSE'*	(dependent on identity code)
'LIMIT WARN'	Level warning	*'NORM.OPEN'*, *'NORM.CLOSE'*	(dependent on identity code)
'RELAY'	Relay output	*'NORM.OPEN'*, *'NORM.CLOSE'*	(dependent on identity code)
'RELAY-LEVEL'	Relay alert level	*'LEVEL 1'*, *'LEVEL 2'*, *'LEVEL 3'*	*'LEVEL 1'*
'STARTCONTROL'	Start-up behaviour of the step motor	ON / OFF	*'OFF'*
'TUBE LIMIT'	Hose replacement, warning time	0 ... 20000 h	5000 h
'LCD-CONTRAST'	Display, contrast	0 ... 100%	38%
'RELAY-MODE'	Relay operating mode	*'ALARM RELAY,'* *'MV RELAY '*	ALARM RELAY
*** for the 1.5 l/h pump**			

Parameter	Meaning	Setting range	Factory setting
'REVERSE-TIME'	Reverse run time (anti-clockwise)	0 s ... 30 m	6 s
'REV.-INTERVAL'	Reverse interval time	0 h ... 2399 h	0 h
'REVERSE FREQ'	Reverse speed	1% ... 100.0%	100%
'REV.RUN COUNT'	Service interval counter	0 ... 32767	0
'REV. TESTMODE'	Test operation for reverse mode	OFF, ON	OFF
'ENTER CODE'	Enter access code	0000 ... 9999	1111
'ACCESS LEVEL'	Level access protection	NONE, LOCK MENU, LOCK ALL	NONE
'APPLICATION'	Application	CHEM-PUMP, FLOC DOSING, ACTIVE CARBON,	(dependent on identity code)
'TUBE TYPE'	Hose dimensions	0.5 l/h, 1.5 l/h, 6.0 l/h, 12.0 l/h	(dependent on identity code)
'CONCENTRAT.'	Concentration	0.01 ppm ... 9999 ppm	40.0 ppm
'MASS PERCENT'	Mass percent	0.1 ... 100.0%	100.0%
'DENSITY'	Density	0.50 ... 2.00 kg/l	1.0 kg/l
'FACTOR'	Pulse interval factor	0.001 ... 1000 (l/p)	1.000 (l/p)
'VOLUME /PULS'	Metering volume per contact	0.001 ... 9999 ml/p	0.040 ml/p
'MEMORY'	Contact memory	OFF, ON	OFF
'CONC.-MODE'	Concentration mode	OFF, ON	OFF
'PAUSE-DELAY'	Delay period after pause	0 s ... 9:59 m	0 s
*** for the 1.5 l/h pump**			

16 Supplementary information to the DF4a operating instructions

16.1 About this pump

DF4a peristaltic pumps with a CAN connector differ from standard pumps because of the possibility of connection to a CANopen bus system. A CAN-DF4a can be connected to a CANopen bus or used as a stand-alone unit.

Example:

- Measurement value-dependent metering of sodium hypochlorite into a swimming pool water circuit, in *'CANopen'* operating mode, the pump being controlled by a controller.

A CAN DF4a of version "CANopen" (identity code feature "Control variant" = C) is intended for integration into a CANopen system.

16.2 Control elements

The operating unit consists of:

1 LCD screen

2 Device LED

3 CAN-LED

4 Control keys

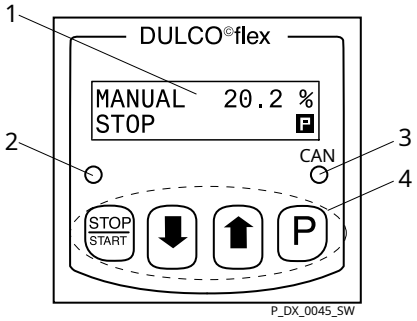

16.3 Functional description

The pump is only controllable via the CANopen bus if it has been set to *'active'* in the *'CANopen'* set up menu, see section "Set-up". Then only the *'Service'* and *'Info'* menus remain.

It is then no longer possible to change parameters in the continuous displays.

If the CANopen bus is set to active and the CAN cable is not plugged in, or the bus traffic is interrupted, the pump reports a bus error.

If the pump is set to *'inactive'* in the *'CANopen'* setting menu, it can participate in the bus traffic, but cannot be controlled via the bus.

16.4 Electrical installation

The pump may be damaged.

- IP65 degree of protection cannot be guaranteed if the CAN cable is not correctly screwed in.
- Manually screw in the CAN cable threaded connectors as far as the stop.

The pump may be damaged.

- The panel plug on the housing may break off.
- Never connect a T-distributor directly to the housing.

Connect the CAN cable to the CANopen bus connector, as shown below.

Insert the mains plug into the power socket - the metering pump may possibly start pumping.

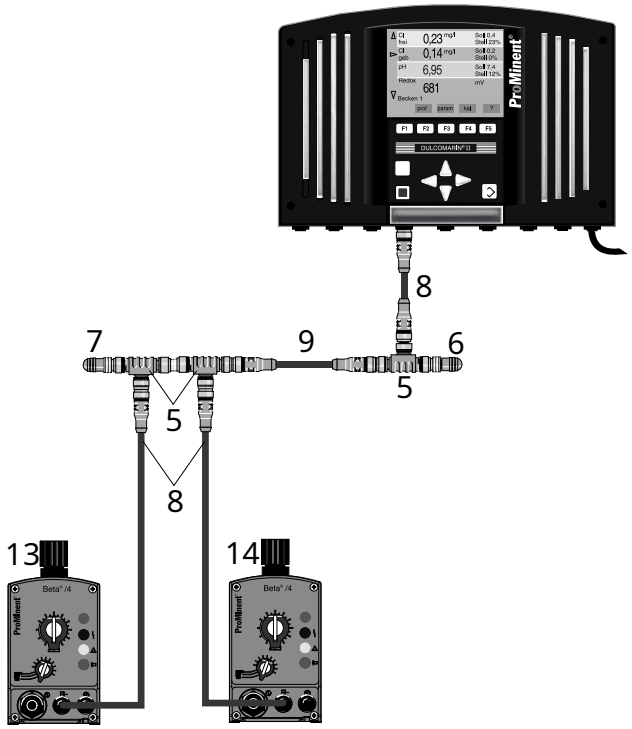

Fig. 24: CAN connector for metering pumps

5 T-distributor, M 12, 5-pin CAN
6 Terminating resistor M 12 coupling
7 Terminating resistor M 12 plug
8 CAN connecting cable CAN connecting cable
9 CAN connecting cable
13 CAN-Beta, e.g. for acid
14 CAN-Beta, e.g. for alkali

Connector for CANopen bus

A five-pin plug is used as the “CANopen bus connector”.

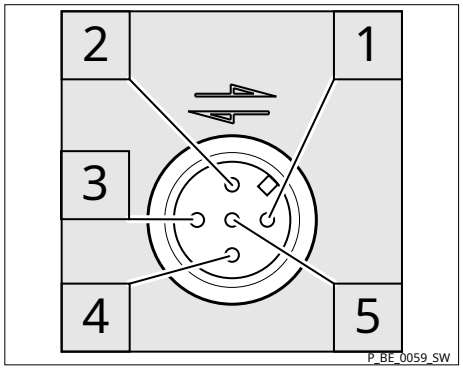

Fig. 25: Pump pin assignment (male)

1 Shield
2 CAN V+ (supply voltage – not connected)
3 CAN GND (reference potential)
4 CAN H (bus line – dominant high)
5 CAN L (bus line – dominant low)

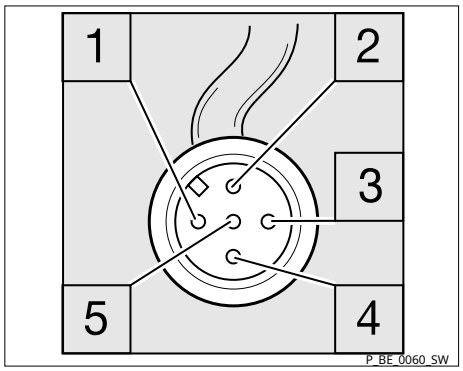

Fig. 26: Pump pin assignment (female)

16.5 Set-up

The pump must be set to "CANopen" - "active" (= supplied state) so that it reacts to the CAN bus signals:

1. Stop the pump using the *[Start/Stop]* key.
   ➡ *‘STOP’* appears on the LCD screen.
2. Press and hold down the *[P]* key for 2 seconds (in the continuous display).
   ➡ The "Main menu" appears.
3. Select the *‘CANOPEN’* menu (*[arrow keys]*) and press key *[P]*.
4. From the menu items select *‘active ’* (*[arrow keys]*) and press *[P]*.
   ➡ The CAN LED lights up green if the pump is connected to a master.
5. Wait until the pump returns to the continuous display or press *[P]* for 3 s.
6. Also start the pump using *[Start/Stop]* so that the Dulcomarin II can control it.

16.6 Troubleshooting

If a bus error occurs, the red fault indicator lights up and the message *‘CANOPEN ERROR!’* appears on the LCD screen.

Operating and fault statuses are displayed using the two LEDs.

Tab. 22: Flash code device LED, top

Colour	Flash code	Cause	Remedy
red	lit	Electronic fault	Return the pump or notify Service
red	flashing	Electronic fault	Return the pump or notify Service
red	slowly flashing	Configuration is faulty	Return the pump or notify Service
red	flickering	two identically configured pumps, e.g. node address	Reconfigure nodes
green	lit	No unit fault pending	- (Pump normal mode)
-	off	No supply voltage	Check cable connections

Tab. 23: Flash code CANopen LED, bottom

Colour	Flash code	Cause	Remedy
red	lit	Controller is BUSOFF	Notify service
red	flashing *	RPDO fault	Notify service
red	single flashing **	ERROR-WARNING error status	Notify service
red	double flashing ***	ERROR-PASSIVE error status	Notify service
green	lit	Bus status OPERATIONAL	- (Pump normal mode)
green	flashing *	Bus status PRE-OPERATIONAL	wait briefly or start pump via bus
green	single flashing **	Bus status STARTUP	wait briefly or set pump for active bus operation - see "Set-up" section
green	flickering	Bus status INIT	wait briefly

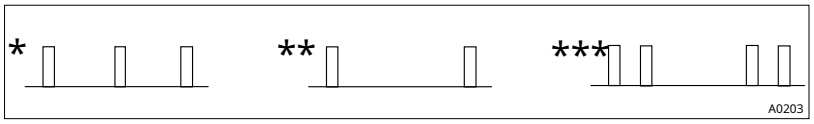

Ignore the flash codes for approx. 2 minutes after connecting the metering pump.

INFORMATION: For "Error messages about CANopen telegram", see end of the appendix.

16.7 Accessories

Accessories	Order no.
T-distributor M12 5-pin CAN	1022155

Accessories	Order no.
Terminating resistor M 12 coupling	1022154
Terminating resistor M 12 plug	1022592
Connecting cable - CAN, M 12, 5-pin, 1 m	1022139
Connecting cable - CAN, M 12, 5-pin, 2 m	1022140
Connecting cable - CAN, M 12, 5-pin, 5 m	1022141
Connecting cable - CAN, sold by the metre	1022160
CAN coupling M 12, 5-pin Screw connector	1022157
CAN plug M 12, 5-pin Screw connector	1022156

17 Index

A

Access code 40
Access level 40
ACCESS LEVEL 40
Accessories 57
Action, step by step 2
Active carbon pump 40
Ambient conditions 53
ANALOG 29, 34
APPLICATION 40
Applied harmonised standards 58
Assembly 13
Automatic backflushing 39
AUX 37
AUX_1 19
AUX_2 19

B

Backflushes 39
Backflushing interval 39
Backflushing parameters 38

C

Calibration 40
CALIBRATION 40
Capacity 29, 30
Capacity change 19
CHANGE CODE 40
CHANGE TUBE 39
Chemical pump 40
Circulation capacity 29
CLEAR COUNTER 38
Climate 54
Commissioning 21
CONC 29
CONCENTRAT 34
Concentration 34
CONFIG 37
Construction 5
CONTACT 29
Continuous displays 27
Control elements 6
Control keys 25
Control unit 23
Counter 38
COUNTER 38

D

Date, nameplate 4
Declaration of Decontamination 50
Decommissioning 50
Degree of protection 54
Designation of the product 58
Dimensional drawing 14
Dimensions and weights 53
Disposal 50
DOS 29

E

Electrical data 54
Emergency 11
Error messages 48

F

FACTOR 30, 36
Faults 48
Final concentration 29
Flocculant pump 40
FLOW 29
Frequency operation 35
Functional description 5

G

General non-discriminatory approach 2

H

Hardware version 39
Hose type 40

I

Identity code 39
INFO 39
Information in the event of an emergency 11
Inputs, electrical 55
Installation 13
Intended use 11

L

LCD-CONTRAST 39
LED 24, 34
Level 20, 37, 55
LEVEL relay 38
LIMIT 37
Links to elements or sections of these instructions or other applicable documents 2

M

Maintenance intervals 44
MANUAL 29
Manual backflushing 38
Material specifications 53
Memory 34
MEMORY 30, 34
Metering concentration 29
Metering volume per contact 30
MODE 34
More symbols 2

N

Node ID 39

O

Operating hours 39
Operating menu 30
Operating menu structure 31
Operating mode 34
Operation 42
Ordering information 57
Outputs, electrical 56
Overview of equipment 6

P

Parameter 34
Parked position 15
Pause 55

PAUSE 37
Performance data 52
Precision 52
Priming 42
Pulse interval 30
Pump hose 39

R

Recycling 12
Regulations governing the disposal of used parts 50
Relay 38, 56
RELAY 38
Relevant EC directives: 58
Replacing the feed chemical tank 42
Replacing the pump hose 44
REV.-INTERVAL 39
REVERSE 38
REVERSE FREQ. 39
REVERSE-TIME 38, 39

S

Safety equipment 11
Safety information 2
Safety requirements 54
Safety section 9
SECURITY 39
Security-relevant settings 39
Serial number 58
SERVICE 38
SET 34
Setting 23
Setting parameters, overview 59
Software version 39
Sound pressure level 56
Start-up behaviour 38
STARTCONTROL 38
Storage 12
Symbols 24
System information 39

T

Technical data 52
Temperature 39
Temperatures 53
Transport 12
Troubleshooting 48
TUBE TYPE 40

U

User qualification 10

V

VOLUM 30

W

Warning information 2, 9
Warnings 48
Wiring diagram 19

ProMinent GmbH
Im Schuhmachergewann 5 - 11
69123 Heidelberg
Germany
Telephone: +49 6221 842-0
Fax: +49 6221 842-215
Email: info@prominent.com
Internet: www.prominent.com

986513, 5, en_GB, © 2026

© 2026