efector140

E80375

BLUE COVER RING FOR KT

Accessories

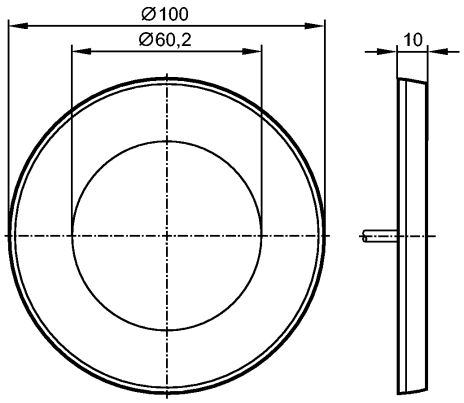

Made in Germany

Product characteristics		
Coloured surround		
Mechanical data		
Design		for type KT
Housing materials		polycarbonate-ABS blue
Weight	[kg]	0.031
Remarks		
Pack quantity	[piece]	2