6002-2RSL

SKF Explorer

Dimensions

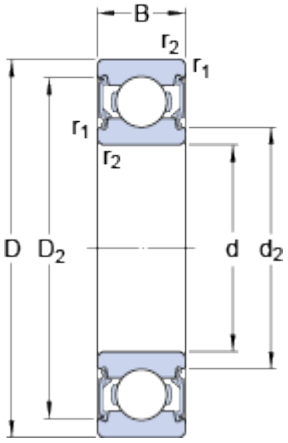

d		15	mm
D		32	mm
B		9	mm
d_2		18.35	mm
D_2		28.2	mm
$r_{1,2}$	min.	0.3	mm

Abutment dimensions

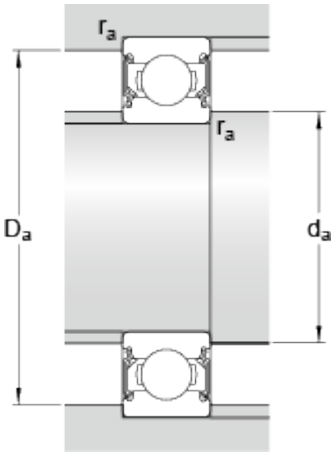

d_a	min.	17	mm
d_a	max.	18.5	mm
D_a	max.	30	mm
r_a	max.	0.3	mm

Calculation data

Basic dynamic load rating	C	5.8	kN
Basic static load rating	C_0	2.8	kN
Fatigue load limit	P_u	0.12	kN
Reference speed		50000	r/min
Limiting speed		26000	r/min
Calculation factor	k_r	0.025	
Calculation factor	f_0	14	

Mass

Mass bearing	0.0302	kg