# D-Series

## Single Pole Toggle Switches

The D-Series single pole compact high current toggle switches are ideal for applications with back panel size constraints. These switches feature self-cleaning contacts and ratings up to 20A 125VAC, 10A 250VAC, 1 1/2 HP 125-250VAC. With an economical double insulated all nylon construction, these switches figure prominently in the Environmental Controls, Marine, Food Service, Vacuum Cleaner and various other general purpose markets with stringent current carrying requirements.



Carling Technologies®
Innovative Designs. Powerful Solutions.

**Carling Technologies, Inc.**
**60 Johnson Avenue • Plainville, CT 06062-1177**
**Phone: (860) 793-9281 • Fax: (860) 793-9231**
**Email: sales@carlingtech.com • www.carlingtech.com**

## Dielectric Strength

UL/CSA: 1000V - live to dead metal parts & opposite polarity
TUV: 4000V - live to dead metal parts; 750V - across open contacts

## Electrical Life

50,000 cycles

## Mechanical Life

100,000 cycles

## Operating Temperature

32°F to 185°F (0° to 85°C)

**DA221 - P - B - B**

1 Base Part Number | 2 Actuator Style | 3 Actuator Color | 4 Bushing Color

### 1 BASE PART NUMBER: SERIES/CIRCUITRY/RATING[1]/TERMINATION

**10A 250VAC, 20A 125VAC, 1 1/2 HP 125-250VAC**

| | Solder Lug | .250 Tab | Wire Leads |
|---|---|---|---|
| On-None-Off | **DA220** | **DA221** | **DA225** |
| On-None-On | **DB220** | **DB221** | **DB225** |
| On-Off-On | **DC220** | **DC221** | **DC225** |

**5A 250VAC, 10A 125VAC, 1/2 HP 125-250VAC, 4(4) 250VACμ TUV approved**

| | Wire Leads |
|---|---|
| On-None-Off | **DA9451** |

### 2 ACTUATOR STYLE

| | | | |
|---|---|---|---|
| **B** | Bat | **P** | Paddle |

### 3 ACTUATOR COLOR[2]

| | | | |
|---|---|---|---|
| **B** | Black | **W** | White |

### 4 BUSHING COLOR[2]

| | | | |
|---|---|---|---|
| **B** | Black | **W** | White |

Notes:
1 DA945 available with wire leads and ON-OFF circuit only.
2 Additional colors available. Please consult factory.

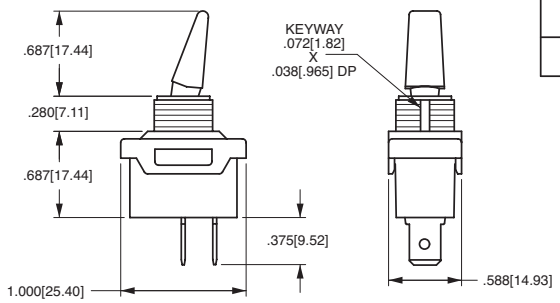


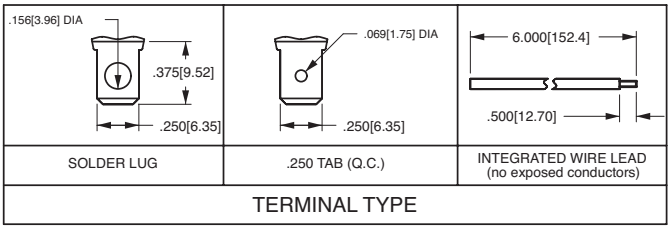


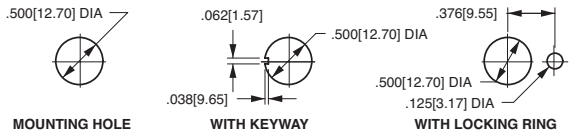


*Manufacturer reserves the right to change product specification without prior notice.

REV_SW_D_0912

60 Johnson Avenue • Plainville, CT 06062–1177 • Phone: (860) 793–9281 • Fax: (860) 793–9231
Email: sales@carlingtech.com • www.carlingtech.com